Low Profile 'PIFA' 4G Antenna

Dr Venu Golluri [*], Apparao Maganti [**], Saritha D [***], Ramesh P [****]

[*] Assoacite Professor,Electronics and Comminication Engineering, Holy Mary Institute of Technology and Science(AUTONOMOUS), Hyderabad, India
[**] Assoacite Professor,Electronics and Comminication Engineering St.Mary's Engineering College Hyderabad, India
[***] Assistat Professor,Electronics and Comminication Engineering, Malla Reddy Engineering College For Women(AUTONOMOUS), Hyderabad, India
[****] Assistat Professor,Electronics and Comminication Engineering, Holy Mary Institute of Technology and Science(AUTONOMOUS), Hyderabad, India

DOI: 10.29322/IJSRP.11.12.2021.p12034
http://dx.doi.org/10.29322/IJSRP.11.12.2021.p12034

Abstract- The Planar Inverted-F Antenna (PIFA) can be considered as advanced from a quarter wavelength monopole antenna and is presently broadly utilized in mobile and versatile radio purposes because of its many eye-getting characteristics, for example, basic structure, lightweight, minimal effort, low-profile, conformal nature, built - in structure and reliable execution. In this paper various plans of PIFA have been introduced which are of low profile, over the top obtain and supports 4G frequencies.

Index Terms- Low profile, PIFA, Monopole

I. Introduction

The planar inverted-F antenna (PIFA) stays as one of the most mainstream antennas utilized in mobile phones today. It is widely utilized inferable from its little size, low profile, astounding execution, basic manufacture and generally low explicit assimilation rate (SAR) [1-4]. In any case, a traditional PIFA has an innate narrowband that must be improved so as to satisfy the inexorably bandwidth necessities forced by the new handsets. On the off chance that a mobile terminal is intended for worldwide inclusion and global meandering, the antenna ought to have the option to work in many frequency groups to cover the numerous 2G, 3G, and 4G systems around the globe [2]. Accomplishing this isn't a simple undertaking thinking about that the new smart phones request more space for the gadgets related to numerous functionalities that these terminals offer, leaving little space to oblige the antenna framework. Before, a few methods have been utilized to improve the bandwidth of PIFA antennas. The presentation of different resonant components so as to make a multiband PIFA is a typical methodology. Another technique requires the expansion of parasitic patches with resonant lengths near the frequency band where the bandwidth improvement is required [7–9]. The consideration of openings in the ground plane has additionally been utilized to upgrade the bandwidth fundamentally in the lower frequencies of the range assigned to mobile phone administrations [5-8]. A similar sort of openings can be utilized in the principle emanating structure to build the bandwidth of a portion of the groups of intrigue. Other PIFA structures can utilize multi layers of resonators so as to expand the quantity of groups where the PIFA can work. At long last, a mix of the past procedures is every now and again used to include the impacts of every technique and increment the PIFA bandwidth.

II. Various Type PIFA Designs

A .PIFA with Double Shorting Stub

Double shorting stubs Planar Inverted F Antenna that is intended to improve the impedance coordinating of the antenna. The double stub antenna lessens the size of the antenna up to 5mm and can be broadly utilized in 2G, 3G and 4G wireless communication systems. The changed Planar Inverted F Antenna covers various frequency groups utilized for handheld gadgets, for example, LTE/AWS (1700), DCS (1800), LTE (1900), PCS (1900), UMTS/IMT
(2000), LTE/AWS (2100), WLAN/Bluetooth (2450) and LTE/WiMAX (2600).

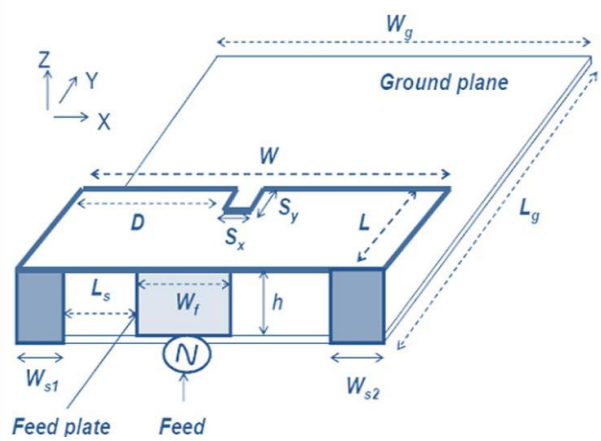

Figure 1 PIFA with double shorting stubs

The planned antenna has a smaller structure of 60mm × 44mm. The adjusted planned PIFA shows an improvement in addition and radiation design. Figure 1 shows the geometry of Planar Inverted F Antenna with Double stubs.

B. Split-Ring PIFA

A conservative and novel structure of Planar Inverted F Antenna dependent on split-ring (SR) is presented in this paper. The antenna is planned utilizing Roger RO3006(tm) substrate. The

two concentric split ring components are set at the head of transmitting patch with four metallic stacking between the rings.

The antenna works at frequency groups of GPS (1572 MHz), DCS (1800 MHz) and WiMAX (3500

MHz). The split-ring resonators show an improvement in impedance coordinating of around 30% and 11% separately. A uniform radiation design is seen at different frequency groups. By presenting concentric SR components, a double band antenna execution can be watched. Figure 2 shows the proposed antenna with SR component.

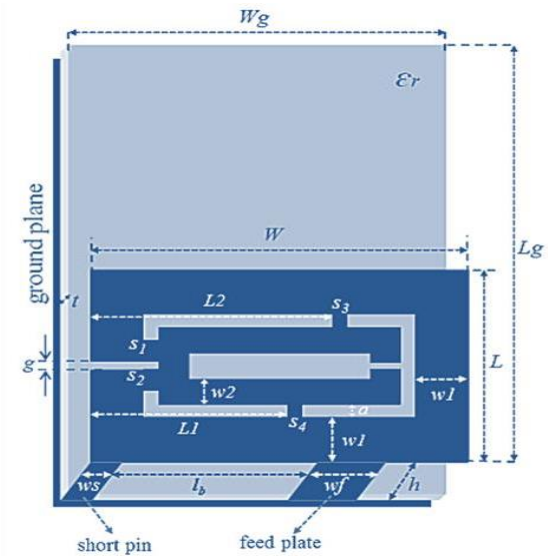

Figure2. Split-Ring PIFA

C. Planar Inverted F Antenna with Parasitic Element

The Planar Inverted F Antenna is planned by presenting a rectangular parasitic component underneath the principle emanating patch. The parasitic components produces double frequency groups with improved bring misfortune back. The antenna is planned utilizing FR4 substrate. Planar Inverted F Antenna with parasitic component resounds at two unmistakable frequency groups i.e., at 2600 MHz for Long Term Evolution (LTE) and 3500 MHz for WiMAX applications. The antenna is structured utilizing a limited fix with measurements 17.8mm × 16.5mm. The antenna shows an omnidirectional radiation design with an addition of 4 to 5 dBi. The plan of the antenna is basic and can be situated in any handheld gadget. Figure 3 shows Planar Inverted F Antenna with Parasitic Element

Figure 3.Planar Inverted F Antenna with Parasitic Element

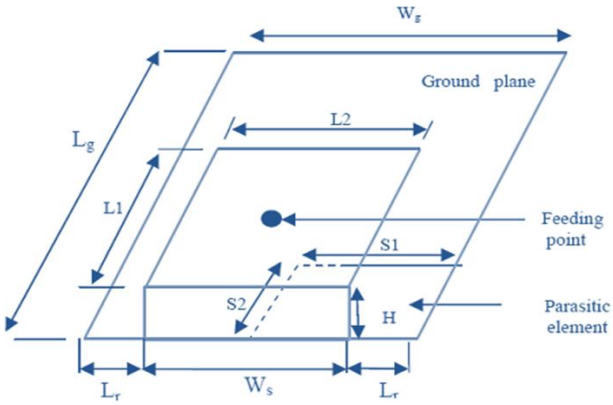

D. C-Shaped Planar Inverted F Antenna

A minimal Planar Inverted F-Antenna that can be effectively incorporated in handheld gadget is planned in this paper. The antenna comprises of a C-formed fix with a shorting plate and a parasitic inverted L component that is situated up close and personal over the ground plane. In this antenna air is utilized as a substrate between the limited ground plane and fix and parasitic component. The antenna works in the frequency groups of WiMAX (3300-3800 MHz) and GPS (1565-1585 MHz). The antenna shows great impedance coordinating and high addition in particular groups. The antenna likewise shows a wide bar width in WiMAX band. Figure 4 shows the geometry of proposed C-Shaped Planar Inverted F Antenna.

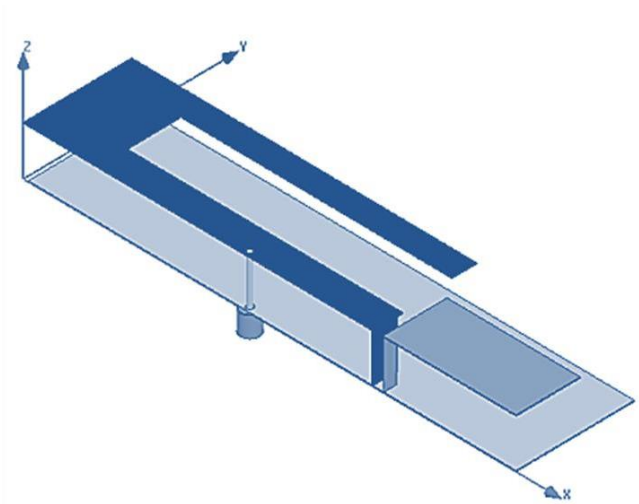

Figure 4 C-Shaped Planar Inverted F Antenna

III. Modified Planar Inverted F Antenna

In this paper, a multiple input multiple output antenna is planned utilizing two altered Planar Inverted F Antenna (PIFA) structures. So as to build the bandwidth of the antenna, two antennas indistinguishable from one another with two shorting plates and an opening on top fix are situated together. Moreover to improve the bandwidth, two openings are additionally embedded on the ground plane. To give the segregation between the two antennas a strip interfacing the feed plate of two antennas is utilized. The elements of the antenna are 100mm × 40mm. The antenna covers a frequency groups from 1800 MHz to 2800 MHz covering LTE/PCS, UMTS/IMT, LTE/AWS, WLAN/Bluetooth

and LTE/WiMAX. The geometry of the antenna is appeared in Figure 5.

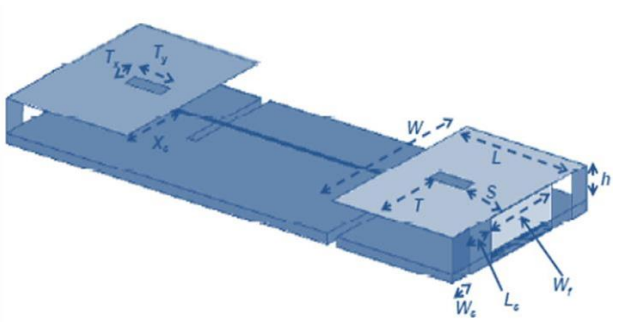

Figure 5.Modified Planar Inverted F Antenna

III. CONCLUSION

In these paper different sorts of Planar Inverted F Antenna (PIFA) are concentrated in a specific way. It has been seen that PIFA is anything but difficult to fabricate and has simple structures. PIFA offers significantly better degree when contrasted with various customary antennas while contemplating SAR (Specific Absorption Rate). Likewise the bandwidth of PIFA is higher than various antennas. Thus it very well may be reasoned that PIFA is foreseen to have a promising future in wireless advances.

ACKNOWLEDGMENT

I thank all the co-authors and staff members of College of Electronics and communication Engineering, HITS, for their kind cooperation and support throughout this paper work.

REFERENCES

[1] G.Venu, Dr.Avinash Gour and Dr.SPV.Subba Rao, "The Design of an Improved Inverted 'F' Antenna for Wireless Applications" in Advances in Mathematics: Scientific Journal 9 (2020) no.7, 5201-5208 ISSN: 1857-8365 (printed), 1857-8438 (electronic) page AMSJ9-N7-87 - Research-Publication (research-publication.com) Spec.Iss on AMABDA-2020.

[2] Wong, H., C. H. Chan, K. Luk, Q. Xue, K. K. So, and H. W. Lai, "Small antennas in wireless communications," Proceedings of the IEEE, Vol. 100, 2109{2121, 2012.

[3] Ying, Z., "Antennas in cellular phones for mobile communications," Proceedings of the IEEE, Vol. 100, 2286{2296, 2012.

[4] Sayem, A. T. M., M. G. Douglas, G. Schmid, B. Petric, and M. Ali, "Correlating threshold power with free-space bandwidth for low directivity antennas," IEEE Transactions on Electromagnetic Compatibility, Vol. 51, 25{37, 2009.

Bhatti, R. A., Y. Im, and S. Park, "Compact PIFA for mobile terminals supporting cellular and non-cellular standards," IEEE Transactions on Antennas and Propagation, Vol. 57, 2534{2540, 2009.

[5] Guo, Y., M. Y. W. Chia, and Z. N. Chen, "Miniature built-in multiband antennas for mobile handsets," IEEE Transactions on Antennas and Propagation, Vol. 52, 1936{1944, 2004.

[6] Chiu, C. W. and F. L. Lin, "Compact dual-band PIFA with multi resonators," IEE Electronics Letters, Vol. 38, 538{540, 2002.

[7] Karkkainen, M. K., "Meander multiband PIFA with coplanar parasitic patches," IEEE Microwave and Wireless Component Letters, Vol. 15, 630{632, 2005.

[8] Cho, Y. J., S. H. Hwang, and S. O. Park, "A dual-band internal antenna with a parasitic patch for mobile handsets and the consideration of the handset case and battery," IEEE Antennas and Wireless Propagation Letters, Vol. 4, 429{432, 2005.

AUTHORS

First Author – Dr Venu Golluri, Assoacite Professor,Electronics and Comminication Engineering Holy Mary Institute of Technology and Science(AUTONOMOUS)
Hyderabad, India venu413@gmail.com
Second Author – Apparao Maganti, Assoacite Professor,Electronics and Comminication Engineering St.Mary's Engineering College Hyderabad, India rao_mail@yahoo.co.in
Third Author – Saritha D, Assistat Professor,Electronics and Comminication Engineering Malla Reddy Engineering College For Women(AUTONOMOUS)
Hyderabad, India sarithadiddi@gmail.com
Fourth Author – Ramesh P, Assistat Professor,Electronics and Comminication Engineering
Holy Mary Institute of Technology and Science(AUTONOMOUS)
Hyderabad, India pandiriramesh82@gmail.com