XAI-based Medical Decision Support System Model

Vytautas Petrauskas*, Gyte Damuleviciene, Algirdas Dobrovolskis*, Juozas Dovydaitis*, Audrone Janaviciute*, Raimundas Jasinevicius*, Egidijus Kazanavicius*, Jurgita Knasiene**, Vita Lesauskaite**, Agnius Liutkevicius*, Zygimantas Meskauskas***

* Centre of Real Time Computer Systems, Kaunas University of Technology
** Lithuanian University of Health Sciences

DOI: 10.29322/IJSRP.10.12.2020.p10869
http://dx.doi.org/10.29322/IJSRP.10.12.2020.p10869

Abstract- The paper presents a model of the geriatric medical diagnostic support system (MDSS) developed in the context of artificial intelligence (AI) using elements of the explainable artificial intelligence (XAI) paradigm, such as computing with words (CWW), fuzzy SWOT analysis maps (FSM), possibility of verbal evaluation of sixteen symptoms, and estimates of the four interacting syndromes and their verbal interpretations. The functional organization of the model is presented mathematically using a vector description method and fuzzy reasoning operations. The viability and proper functioning of the implemented software model are confirmed by a pilot advisory practice in a geriatrics clinic. The paper concludes with a list of future further research.

Index Terms- Explainable artificial intelligence (XAI), Computing with words (CWW), Fuzzy SWOT maps (FSM), Fuzzy logic based reasoning, Verbalization, Degree of certainty, Membership function, Fuzzy logic terms, Geriatric syndromes, Geriatric symptoms, Medical decision support systems (MDSS), Interpretability, Functional organization, Knowledge - driven artificial intelligence.

I. Introduction

Recently both in the world of science and in industry as well as in culture, much attention have been paid to the study of the possibilities of the development and application of so-called artificial intelligence (AI). Just ask in the GOOGLE system, for example, "artificial intelligence today: review" and the system provides data on 377 million links in 0.55 sec. The relevance of the issue of artificial intelligence research can also be felt from the material presented, for example, in the WCCI-2020 Congress reports [1-3] because “the IEEE WCCI 2020 is the world’s largest technical event on computational intelligence, featuring the three flagship conferences of the IEEE Computational Intelligence Society (CIS) under one roof: The 2020 International Joint Conference on Neural Networks (IJCNN 2020); the 2020 IEEE International Conference on Fuzzy Systems (FUZZ-IEEE 2020); and the 2020 IEEE Congress on Evolutionary Computation (IEEE CEC 2020)”. 1,819 highest quality papers were accepted from over 73 countries and they confirm the highest interest in research and modern development of the artificial intelligence paradigm.

True, the issue of artificial intelligence is not new; it has just emerged with the birth of a computer, which by the way was not yet called a computer, but simply as an analytical Charles Babbage engine [4]. Then the world’s first programmer, Ada Augusta Lovelace (Byron), impressed by the capabilities of this device, asked if this device would really be smarter than a human. As we can see, the question remains open to this day and perhaps only philosophically supplemented by the question of whether we - humans need it and to what extent? [5].

Today no one doubts the great potential of artificial intelligence in practically every area of human life. But the successful spread of its applications often raises questions about trust in it, especially when the decisions and recommendations are about vital issues and questions under consideration. The successful use of methodologies and tools born of the artificial intelligence (AI) paradigm is based on trust issues: the reliability of the recommendations, advices and actions provided by the AI not only for the tool developer but also for its end user. It means that the AI success is based on the richness, validity, reliability, interpretability and explainability of all AI solutions.

Explainable artificial intelligence (XAI) has received a particularly strong systemic approach, with DARPA making its interest in the research field public and providing a number of its own potential case studies ([6, 7]), some of which are followed by a number of responsible studies, for example, [8–12] and other literature sources as it is seen in [1-3].

It should be emphasized that the analysis of already published papers on XAI research reveals priority areas for XAI applications. Among those areas, in addition to military-defense applications, medical diagnostic and medical decision support systems (MDSS) in general are clearly dominating. The current situation and the need and depth of MDSS research, as well as the scale and importance of the applications of such support systems, are well reflected in the publications examined, such as [13-18]. Interestingly, the authors [17] present their main conclusion that: "Based on our review, we found that XAI evaluation in medicine has not been adequately and formally practiced. … Ample opportunities exist to advance XAI research in medicine". And so authors indicated the most sensitive direction of such necessary work.

According to various literature sources in the world, including the Republic of Lithuania, population aging is one of the problems in the field of health care that promotes the development of MDSS implementation for the diagnosis, treatment and care of diseases in the elderly ([19-24)].Clinical Department of Geriatrics of the Lithuanian University of Health Sciences has very clearly formulated the main statements concerning the situation. Although Lithuanian population is

aging and the number of older persons is increasing, the expectancy of autonomous life is one of the shortest in Europe. An increasing number of the elderly results not only in aging society, but in increasing morbidity as well. Reality of life is encouraging health care systems to take into account the needs of older patients and to seek for comprehensive assessment, which is not limited by physical assessment only but includes evaluation of functional state especially involving the MDSS tools based on XAI ([19], [20]).

For several years now, the Clinical Department of Geriatrics of the Lithuanian University of Health Sciences has united its researchers with scientists and computer engineering specialists of the Centre of Real Time Computer Systems of the Kaunas University of Technology for the joint project "Explainable Artificial Intelligence for Assessing the Health Risks of a Geriatric Patients", and as a result the diagnostic XAI - based MDSS model was designed and is presented here. This research was funded by the Research and Innovation Fund of Kaunas University of Technology and the Research Fund of Lithuanian University of Health Sciences, project acronym GeRiMoDIs.

This paper is organized as follows: the preliminaries are presented in Section 2. The functional organization of the MDSS model is described in Section 3. Section 4 is devoted to present applications of the MDSS model to geriatric practice. And finally, the conclusions with a list of future further research are drawn in Section 5.

II. PRELIMINARIES

The team of authors of the research and model realization conducted in this article are of the opinion that the object of computerized system analysis, design making processes and information processing shifts from raw data towards more sophisticated computing according to the following scheme: DATA → INFORMATION → KNOWLEDGE → WISDOM [25].This is especially true of the possibilities and efforts to develop an XAI-based MDSS model, as in medicine the processing of tremendously huge data and the aggregation of information has already been done thanks to a huge number of medical practitioners, who are already a kind of accumulators of valuable knowledge.

Following these provisions of ours, which correlate well with DARPA insights ([6,7]), it is possible to symbolically represent and compare labor costs, the accuracy achieved, and the explainability obtained using the Data-Driven, Information-Driven, and Knowledge-Driven Artificial Intelligence for development of the MDSS model as it is shown in Fig.1.

Based on the analysis of all conceptual aspects of the use of artificial intelligence in medicine, it was decided to choose the application of Knowledge-Driven XAI as the most effective use of medical expert knowledge and the most flexible and easy interpretable explanations of the validity of its diagnostic and other solutions.

It is worth to emphasize that the Centre of Real Time Computer Systems of Kaunas University of Technology (CRTCS) has proposed a new universalized concept of a system using a dynamic SWOT analysis network for fuzzy control of risk in complex environments [26], whose philosophy fully includes the functioning of many real systems, including medical decision support systems (MDSS).

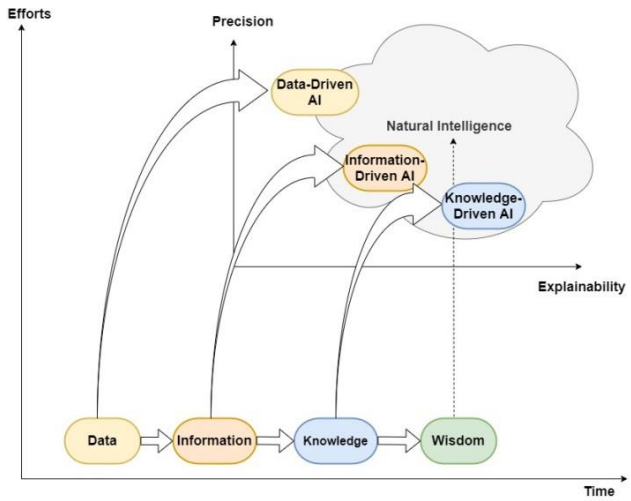

Fig. 1. Symbolic comparison of efforts, precision and explainability level obtained in case of different approaches to the base of AI source..

A generalized view of such an abstract system is shown in Fig.2. Each abstract complex environment in question is treated as a problem, characterized by a number of indicators and parameters, the analysis of which assesses the state of that medium.

The analysis of an environment E is entrusted to the fuzzy network of SWOT elements shown in Fig. 2 as the SWOTengine_Net layer

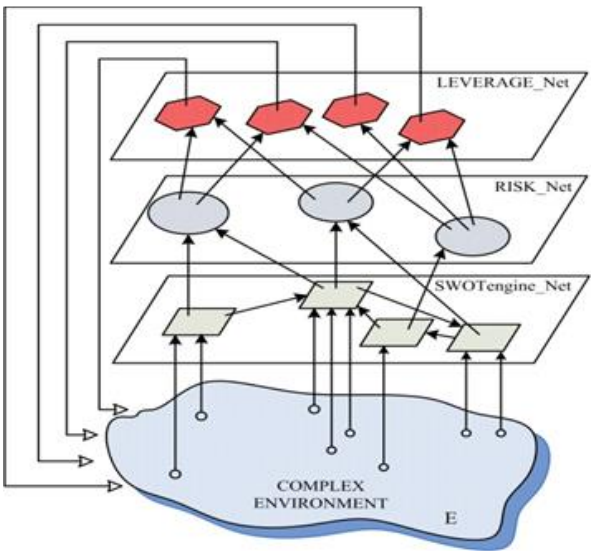

Fig. 2. A generalized view of an abstract system for risk control in the complex environment.

The RISK_Net layer provides an assessment of the state of the environment and passes it to the LEVERAGE_Net where recommendations, signals and/or actions to be formed. The latter layer, with the help of feedback, acts as complex of tools for optimizing possible states and managing risks in the complex environment E under investigation.

As for the SWOTengine_Net layer, it is important to note on the one hand that it is covered by elements using the conventional SWOT methodology [27] and on the other - that those elements are enriched with computing with words (CWW) capabilities and can process both normal digital information as well as verbal information, i.e., words representing one or another linguistic

estimate of a parameter or indicator. Symbolically, such a SWOT element using a CWW based on fuzzy logic and a fuzzy reasoning mathematical apparatus is shown in Fig. 3 [28].

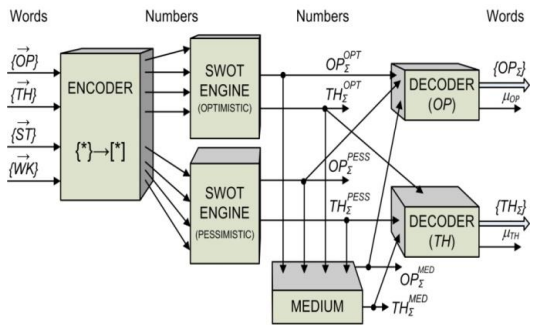

Fig. 3. SWOTengine enriched with computing with words (CWW) capabilities.

It is understood that the processing of vague verbal reasoning is related both to the vocabulary used and to the degree of certainty of each estimate. These characteristics and parameters will be discussed in the article as we move on to addressing specific medical geriatric problems.

The interactions between SWOTengines on the SWOT network level usually reflects the real interactions of phenomena in the complex environment E under study. The model of these interactions at the SWOTengine_Net level (Fig. 2.) is implemented using the newly developed network of fuzzy SWOT maps (FSM) proposed at the CRTCS; the efficiency of those FSM has been tested and confirmed in other projects [29].

In the universalized structure concept (Fig.2), proposed for the management of the risks in the environment E ([26]), the cases of covering all other layers with the necessary elements are also provided. However, the practice of the Clinical Department of Geriatrics of the Lithuanian University of Health Sciences says that the most sensitive and most awaiting place for XAI-based MDSS is the first layer of the SWOTengines_Net structure. In this case, environment E would correspond to the patient, each SWOT element would correspond / cover one syndrome, and the inputs of the SWOT element (Fig. 3) ($\overrightarrow{WK}$ and / or $\overrightarrow{ST}$) would correspond to the symptoms and data accompanying the patient's illnesses and obtained using diagnostic tests and answers to certain questionnaires. $\overrightarrow{OP}$, and in particular $\overrightarrow{TH}$, would then be matched by diagnostic estimates characterizing the level of the syndrome / disease. Because cautious geriatric practice is more focused on the "pessimistic" version of SWOT analysis, these studies and model implementations focus more on aspects of SWOT analysis that assess patient weaknesses in $\overrightarrow{WK}$ and reveal and highlight the level of disease threat $\overrightarrow{TH}$ and / or risk.

III. FUNCTIONAL ORGANIZATION OF THE MDSS MODEL

After thorough summarizing the listed geriatric needs and possibilities to develop an XAI-based MDSS model, it is important to formalize a description of its functional organization. The generalized approach to model functions is as follows: a geriatric patient is typically characterized by multiple symptoms, study data, and estimates of responses to specific questionnaires. It is desirable that the symptoms and data to be processed be available in both digital and verbal forms and that their assessment be performed using artificial intelligence techniques reminiscent of natural human specialist knowledge and intelligence, and that diagnostic results and recommendations be provided in verbal form. This requires special estimation matching dictionaries and methodologies for transferring estimates from digital to verbal form and vice versa with a certain degree of certainty.

It is convenient to start the formalization process itself by clearly defining the symbols of the variables used, the mathematical operations performed and explaining their real physical meaning. So, the Table 1 presents notations that are used in the formalization and description of the functional organization of the XAI-based medical diagnostics and decision support system (MDSS) model.

TABLE 1
THE NOMENCLATURE FOR THE XAI-BASED MDSS MODEL.

SYMBOL	LITERAL DEFINITION (DESCRIPTION)	MATHEMATICAL DEFINITION OR FORMULA
s	Index of symptoms	$s = 1, 2, \dots, s, \dots, S$
d	Index of syndromes (diseases)	$d = 1, 2, \dots, d, \dots, D$
q	Index of questions	$q = 1, 2, \dots, q, \dots, Q$
dq	Index of answers to question q of the *d*-th questionnaire	$dq = d1, d2, \dots, dq, \dots, dQ$
$\vec{x}$	Generalized vector of symptoms	$\vec{x} = (x_1, x_2, \dots, x_s, \dots x_S)$
$\overrightarrow{y_d}$	Generalized vector of answers to the *d*-th questionnaire	$\overrightarrow{y_d} = (y_{d1}, y_{d2}, \dots, y_{dq}, \dots y_{dQ})$
W_{DS}	Matrix of relations between syndromes *D* and symptoms *S*	$W_{DS} = \begin{pmatrix} w_{11}, \dots, w_{1s}, \dots, w_{1S} \\ \vdots \\ w_{ds} \\ \vdots \\ w_{D1}, \dots, w_{Ds}, \dots, w_{DS} \end{pmatrix}$
w_{ds}	Strength of influence of symptom *s* to syndrome *d*	An element of the W_{DS} $(s \to d)$
$\overrightarrow{W_d}$	Vector of influence of the answer y_{dq}, (q= 1, 2, … , Q) to the questionnaire *d*	$\overrightarrow{W_d} = (w_{d1}, w_{d2}, \dots, w_{dq}, \dots w_{dD})$
W_{DD}	Matrix of relations between syndromes	$W_{DD} = \begin{pmatrix} 0, w_{12}, \dots, w_{1d}, \dots, w_{1D} \\ \vdots \\ 0 \\ \vdots \\ w_{D1}, w_{D2} \dots, w_{Dd}, \dots, 0 \end{pmatrix}$
$\vec{z}$	Generalized vector of level of the syndromes	$\vec{z} = (z_1, z_2, \dots, z_d, \dots z_D)$

As can be seen from Table 1, the model to be designed must assess the level of D interacting syndromes (or diseases) whose threat level can be judged from the S symptom estimates and the estimates of answers to the Q questions specific to each syndrome.

An important feature of the model is that estimates of the parameters or symptoms to be processed can be either numerical or verbal. For example, the overall estimate x_s for any s symptom can be given in numeric form as $x_s = [x_s]$ or in verbal form as $x_s = \{x_s\}$. These notations [*] or {*} are used when it is necessary to emphasize the type of parameter estimate under processing; that is, in the absence of such a necessity, simply a generalized estimate notation x_s is used.

Since the model has to operate/process both numerical and verbal estimates of parameters and answers to questions, it is necessary to have some vocabulary of correspondences between digital and verbal estimates and fuzzy logic-based terms allowing the level of certainty μ (x) of such compliance to be assessed [28]. An example of such vocabulary and fuzzy logic terms used in geriatric practice are given in Fig. 4.

{N} – None
{S} - Small
{M} - Medium
{L} – Large

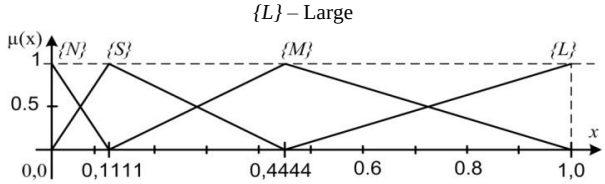

Fig. 4. An example of vocabulary and fuzzy logic terms

The verbalization (fuzzification) of the digital estimate can be conveniently explained by the example in Fig. 5. Here a digital INPUT estimate $[x_1]$ is transformed into OUTPUT consisting of two words: the word {M} (Medium) with the certainty μ (M) = 0,7 and the word {S} (Small) with the certainty μ (S) = 0,3.

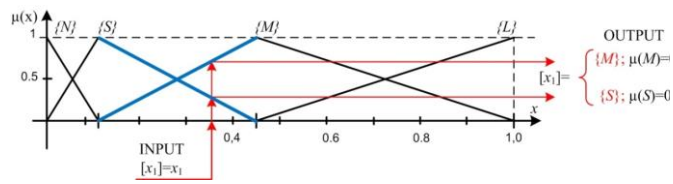

Fig. 5. An example of verbalization

The process of digitalization (defuzzification) of any verbal estimate is performed in analogues way and is demonstrated in Fig. 6.

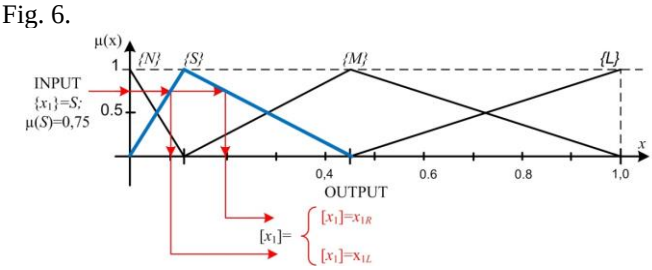

Fig. 6. An example of digitalization

In this case a verbal estimate $\{x_1\}$ = {S} (Small) is presented at the INPUT together with the value of certainty of this statement let as say μ (S) = 0,75.

The statement {S} with the proclaimed degree of certainty generates in the OUTPUT two possible digital estimates: $[x_1] = x_{1L}$ and $[x_1] = x_{1R}$ which denote the left and right points of the number interval. And the higher the certainty of the verbal estimate, the narrower the range of the output digital estimate.

According to the needs of geriatric practice presented here, XAI possibilities and using the described mathematical apparatus and its possible application details, it is possible to formally present the generalized structure of geriatric and functional organization of the XAI-based MDSS model (Fig. 7) and to describe it with a set of formulas and mathematical relations (1) – (6).

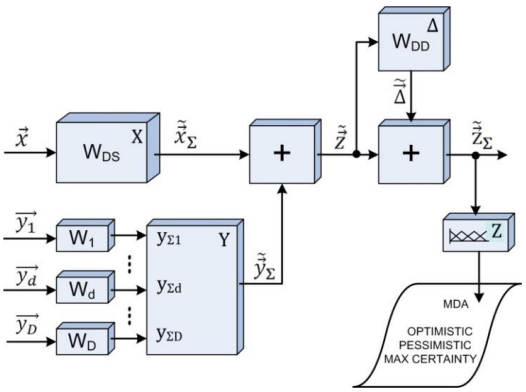

Fig. 7. A structural representation of functional organization of the XAI-based geriatric MDSS model.

Keeping in mind the fuzzy SWOT maps network (FSM) terminology and approach to the implementation of the XAI-based geriatric MDSS model, the first weaknesses $(\overrightarrow{\mathrm{WK}})$ that characterize the state of certain patient are symptoms S. Their influence to the threats $(\overrightarrow{\mathrm{TH}})$ of syndromes D can be evaluated in the block-box X by vector multiplication given in (1) where T stands for vector transposition operation:

$$\overrightarrow{x_\Sigma} = \mathrm{W}_{DS} \cdot \vec{x}^T \quad (1)$$

An influence of the estimate $\overrightarrow{y_d}$ of the answers to the questions of the questionnaire d is formed in a similar way in the corresponding block-box W_d as a scalar multiplication (2):

$$y_{\Sigma d} = \overrightarrow{y_d}\,\overrightarrow{W_d} \quad (2)$$

Such an operation must be performed to answers of all questionnaires to be taken into account at this moment. So the block-box Y collects all available evaluations of the answers and forms a corresponding vector (3) for the following operations necessary to evaluate a current state of the threats of all interacting syndromes:

$$\overrightarrow{y_\Sigma} = (y_{\Sigma 1}, y_{\Sigma 2}, \dots, y_{\Sigma d}, \dots, y_{\Sigma D}) \quad (3)$$

Must be strongly emphasized that all results after each operation are normalized in each block-box to have summarized estimates in the range [0-1]. The normalization itself is performed by dividing the non-normalized result of the operation by the sum of all possible maximum input elements. In the formulas and structure (Fig. 7), the normalized values are denoted by additional tildes, for example, let us say the value $\overrightarrow{y_\Sigma}$ after normalization looks like $\tilde{\vec{y}}_\Sigma$.

So, the results $\overrightarrow{x_\Sigma}$ and $\overrightarrow{y_\Sigma}$ obtained correspondingly in the block-boxes X and Y are conveyed after normalization as $\tilde{\vec{x}}_\Sigma$ and $\tilde{\vec{y}}_\Sigma$ for an evaluation of the summarized and normalized as well level of threats of the syndromes under consideration in the form of vector $\tilde{\vec{z}}$:

$$\tilde{\vec{z}} = \tilde{\vec{x}}_\Sigma + \tilde{\vec{y}}_\Sigma \quad (4)$$

As it is well known, geriatric syndromes often interact and strongly promote each other. The nature of such interactions is reflected in this description of the functional organization of the XAI-based MDSS model by the interaction strength matrix W_{DD}. That $D \times D$ dimensional matrix is an important reflection of the expertise and knowledge of the geriatric clinic. This inter syndromic interaction is included in the functional organization of the model by calculating the estimate $\tilde{\vec{\Delta}}$ of the strength of that influence according to (5) in the block-box Δ:

$$\tilde{\vec{\Delta}} = W_{DD}\,\tilde{\vec{z}}^{\mathrm{T}} \quad (5)$$

The final assessment of the threat and risk of all syndromes is obtained by summing and normalizing the estimates of the immediate threat and the threat of interactions (6).

$$\tilde{\vec{z}}_\Sigma = \tilde{\vec{z}} + \tilde{\vec{\Delta}} \quad (6)$$

After the transformation of $\tilde{\vec{z}}_\Sigma$ into verbal form in the block-box Z, i.e. after each component of this vector of digital estimates of corresponding syndrome receives its verbal estimate and the digital estimate of the certainty, the model produces a medical decision answer (MDA) (Fig.7.), consisting of three statements: about OPTIMISTIC diagnose with its estimate of certainty, PESSIMISTIC one also with the estimate of its certainty, and the most RELIABLE diagnose with the highest estimate of its certainty.

IV. APPLICATION OF THE MDSS MODEL TO GERIATRIC PRACTICE

Based on the functional organization of the XAI-based MDSS model developed and described in the third section of the article, two versions of such a model were programmed for the Clinical Department of Geriatrics, Lithuanian University of Health Sciences to perform specific tasks of geriatric practice: for research and for training of junior medical staff and students as well. In both cases four (D = 4) interacting syndromes were taken under consideration as to be diagnosed: MALNUTRITION (M), OROPHARYNGEAL DYSPHAGIA (OD), DEMENTIA (D), and DEHYDRATION (DH).

Their essential definitions and the implicit interactions according to the knowledge of experts are symbolically represented in Fig. 8 and in Table 2. The estimates of strength of this mutual influence were delivered by the team of experts of geriatric practice in a verbal form. Those verbal estimates were transformed into digital form using the fuzzy logic based mechanism described in the Fig. 6. Worth of mentioning the fact, that in practical implementation of the model the richer vocabulary was used and the correspondingly the number of fuzzy logic terms was higher.

The Fig. 9 represents the really used set of terms, and the formula (7) expresses the matrix WDD (see Table 1) representing digital strength of influences obtained from verbal estimates delivered according to the experts' knowledge (Fig.10).

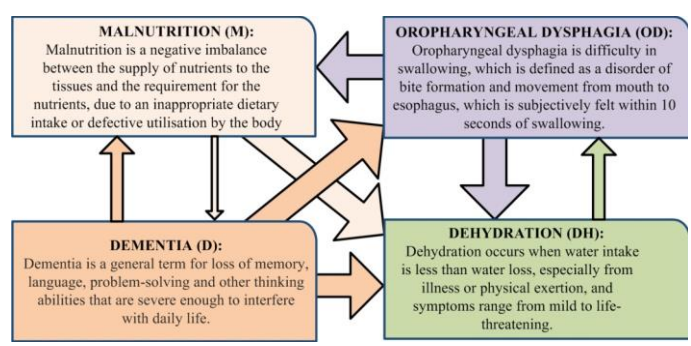

Fig. 8. Definitions and interactions among M, OD, D and DH

$$W_{DD} = \begin{pmatrix} 0{,}0000 & 0{,}0000 & 0{,}6250 & 0{,}5625 \\ 0{,}5625 & 0{,}0000 & 0{,}0000 & 0{,}5625 \\ 0{,}2500 & 0{,}5625 & 0{,}0000 & 0{,}5625 \\ 0{,}0000 & 0{,}2500 & 0{,}0000 & 0{,}0000 \end{pmatrix} \quad (7)$$

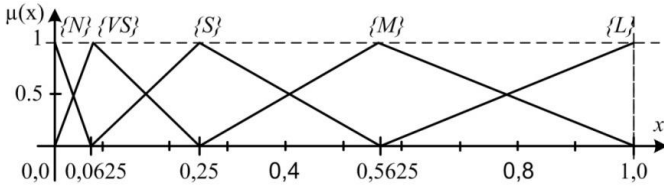

Fig. 9. Really used fuzzy logic terms in the model implementation for digitalization of experts' words.

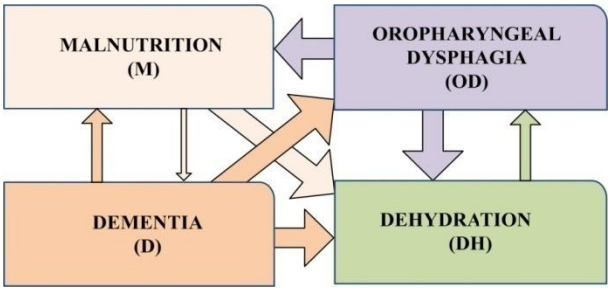

Fig. 10. Symbolic representation of estimates of syndromes' influences and the corresponding matrix W_{DD}

This geriatric knowledge based matrix of relations between syndromes (Fig.10.) is covered in the programs of both models by the corresponding fuzzy SWOT map (FSM) on the SWOTengine_Net layer as it was provided in the functional organization description (Section 3) and in the structure of a general system for risk control (Fig. 2). Numerical and/or verbal symptom estimates and total estimates of the answers to the questions in each questionnaire serve as input data for the respective SWOT map elements. As mentioned above, models' implementations focus more on aspects of SWOT analysis that assess patient weaknesses in $(\overrightarrow{WK})$. The list of patient's weaknesses in the form of symptoms is presented in Fig. 11 (lines 13 – 30 and columns J, K, L, M), and the weaknesses in the form of answers to the questionnaires – in the same Fig. 11 (lines 31 – 34 of the same columns J, K, L, M). The list of symptoms and questionnaires as SWOTengines' input information sources shown in Fig. 11 are supplemented by information about possible interval of their estimates (the column N); another part of the Fig. 11 as an example is supplied by data from one practical diagnostic case (columns O and P)

After the patient is properly registered, as shown in Fig. 13, all available information about the symptoms, tests and answers to the relevant questionnaires is entered into the model, and an information/control window is formed (see Fig. 11).

The set of questionnaires was composed according to international geriatric practice adopted and supplemented by knowledge accumulated in the Department of Geriatrics of the LSMU [30-36].

Definitions of geriatric syndromes covered in this diagnostic model are presented in Table 2 and their maximal possible scores are depicted in Fig. 12 (Column E). Incidentally, the F and G columns are filled with diagnostic data from one particular patient and serve as an example of the overall estimate (F) and the normalized estimate (G) in that particular case.

	J	K	L	M	N	O	P
13							
14		Symptoms			Interval	Score	Estimate in the model
15	M	Decreased appetite;			(0-3)		0
16		Eat less;			(0-3)		0
17		Weight loss;			(0-3)		0
18		Clothes, shoes, rings became too big;			(0-3)		0
19	OD	Choke by drinking or eating;			(0-3)	3	1
20		Coughing while drinking or eating;			(0-3)		0
21		When you drink, the voice changes, the language;			(0-3)		0
22		It is difficult to swallow the pills;			(0-3)		0
23	D	Refuses to leave;			(0-3)		0
24		Food spills out of the mouth;			(0-3)		0
25		Spits out food;			(0-3)		0
26		No longer able to eat;			(0-3)		0
27	DH	Drink low fluids;			(0-3)	3	1
28		Urine became darker in color;			(0-3)	3	1
29		Less urination;			(0-3)	3	1
30		Dry or dry mouth;			(0-3)	3	1
31	Question-naire	M			(0-14)	0	0,000
32		OD			(0-40)	0	0,000
33		D			(0-20)	0	0,000
34		DH			(0-40)	0	0,000

Fig. 11. List of symptoms and questionnaires as SWOTengines input information sources.

	A	B	C	E	F	G
1				Total possible score	Total score entered	Normalized score in the model
2						
3	Symptoms	M		4x(0-3)		0
4		OD		4x(0-3)	1x3	0,25
5		D		4x(0-3)		0
6		DH		4x(0-3)	4x3	1
7	Questionnaire	M		(0-14)	8	1,000
8		OD		(0-40)		0,000
9		D		(0-20)		0,000
10		DH		(0-40)	7	0,250

Fig. 12. List of maximal scores of geriatric syndromes and questionnaires.

As mentioned above, the first step involves answering screening questions regarding four geriatric syndromes. Four characteristic questions are allocated to each syndrome (Table 3).

After receiving the prognostic answer from this tool, the specialist continues by filling out a questionnaire according to the syndrome. We would like to stress that high questionnaire scores signify the presence of a syndrome in this tool.

TABLE 2.
DEFINITIONS OF GERIATRIC SYNDROMES

Geriatric syndrome	*Definition*
MALNUTRITION (M)	*Malnutrition is a negative imbalance between the supply of nutrients to the tissues and the requirement for the nutrients, due to an inappropriate dietary intake or defective utilization by the body*
OROPHARYNGEAL DYSPHAGIA (OD)	*Oropharyngeal dysphagia is difficulty in swallowing, which is defined as a disorder of bite formation and movement from mouth to esophagus, and which is subjectively felt within 10 seconds of swallowing*
DEMENTIA (D)	*Dementia is a general term for loss of memory, language, problem-solving and other thinking abilities, which is severe enough to interfere with daily life*
DEHYDRATION (DH)	*Dehydration occurs when water intake is lower than water loss, especially due to illness or physical exertion, and symptoms range from mild to life-threatening*

TABLE 3.
SCREENING QUESTIONS FOR GERIATRIC SYNDROMES

Geriatric syndrome	*Screening questions*
MALNUTRITION	*Decreased appetite* *Eating less* *Decreased weight* *Clothes, shoes, rings have become too large*
OROPHARYNGEAL DYSPHAGIA)	*Chokes while eating or drinking* *Coughing while eating or drinking* *Voice and speech changes after drinking* *Difficulty swallowing pills*
DEMENTIA (eating disorders in dementia)	*Refuses to open the mouth* *Foods pills out of the mouth* *Spits out the food* *No longer knows how to eat*
DEHYDRATION	*Drinks little amount of fluids* *Urine has become darker* *Urinates less* *Dry mouth*

DATE (YYYY.mm.dd)	CODE OF PATIENT CASE HISTORY							
2020.11.11 17:29	20CP 28754							
NAME	SURNAME	BIRTH DATE (YYYY.mm.dd)	AGE		GENDER	HEIGHT	WEIGHT	BMI
			Y	M		m	kg	kg/m²
Ona	Ambrazevičienė	1935.05.31	85	6	Moteris	1,75	66	21,551

Fig. 13. Patient's registration card.

For malnutrition, we used the MNA-SF scale [31] with the maximal score being 14. A good nutritional status is indicated by model (0-2 points), malnutrition risk by 0,5 (3-6 points), and malnutrition by 1 (7-17 points).
For oropharyngeal dysphagia, we used the EAT-10 dysphagia screening tool [24], with the maximal score being 40. In this model, suspected dysphagia is indicated by 0,5 (3 10 points) and dysphagia by 1 (11-40 points).
For dementia, we used the Edinburgh feeding evaluation in dementia scale [35], with the maximal score being 20. In this model, severe dementia, which is associated with other syndromes is indicated by 1, corresponding to a score of 11 20.

For dehydration, we used a set of questions formed using the ESPEN guidelines on clinical nutrition and hydration in geriatrics [36], with the maximal score being 40. Dehydration risk is indicated by 0,5 (6-10 points) and dehydration by 1 (11 40 points).
The maximal scores and interpretations of the questionnaires are presented in Table 4 and their maximal possible scores are depicted in Fig. 12 (Column E).

TABLE 4.
MAXIMAL SCORE AND INTERPRETATION OF GERIATRIC SYNDROME QUESTIONNAIRES

Geriatric syndrome	*Max points*	*0 –good*	*0.5 –it can be bad*	*1 – it is bad*
MALNUTRITION	*14*	*0-2*	*3-6*	*7-14*
OROPHARYNGEAL DYSPHAGIA	*40*	*0-2*	*3-10*	*11-40*
DEMENTIA (eating disorders in dementia)	*20*	*0-5*	*6-10*	*11-20*
DEHYDRATION	*40*	*0-5*	*6-10*	*11-40*

If necessary, it is possible to track and verify all intermediate stages of information processing, which further highlights the application of the paradigm of explainable artificial intelligence in all stages of computation.
Examples of intermediate windows for one case are shown in Figure 14. Here it is possible to follow the formation of syndrome threats from the estimates of symptoms and answers to the questionnaires to the end of processing before the normalization of the results. Naturally, such a need rarely arises, and diagnostic advice information from this model of XAI-based MDSS is provided to medical staff in the form described in Section 3 after the normalization and verbalization procedures are performed.

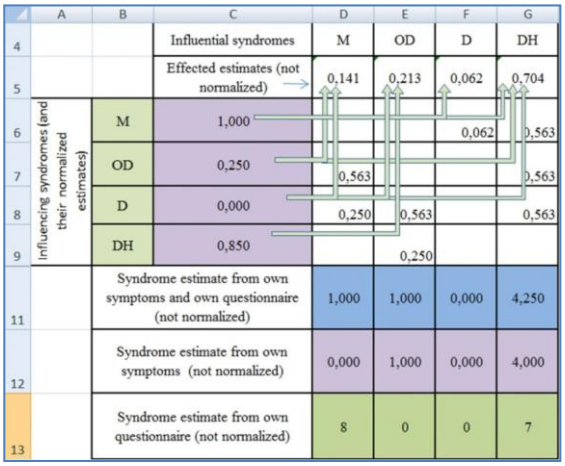

Fig. 14. Internal model information window demonstrating computational processes.

Therefore, this tool provides the specialist with a pessimistic, optimistic, or most probable prognosis of some geriatric syndromes, e.g. most probable prognosis for the patient: medium malnutrition prognosis with certainty 0,772, low oropharyngeal dysphagia prognosis with certainty 0.604, low dementia prognosis with certainty 0,560, and medium dehydration

prognosis with certainty 0.525. An example of such a case is shown in Fig. 15.

Examples of intermediate windows for one case are shown in Fig. 14. Here it is possible to follow the formation of syndrome threats from the estimates of symptoms and answers to the questionnaires to the final processing before the normalization of the results. Naturally, such a need rarely arises, and diagnostic advice information from this model of XAI-based MDSS is provided to medical staff in the form described in Section 3 after the normalization and verbalization procedures are performed. An example of such a case is shown in Fig. 15.

	A	B C D	E	F	G H
27	PACIENT ...	General threat of sindroms			
28		MALNUTRITION (M)	OROPHARYNGEAL DYSPHAGIA (OD)	DEMENTIA (D)	DEHYDRATION (DH)
30	Pessimistic diagnosis	LARGE with certainty	MEDIUM with certainty	SMALL with certainty	LARGE with certainty
31		0,228	0,396	0,560	0,475
32	Optimistic diagnosis	MEDIUM with certainty	SMALL with certainty	NOT with certainty	MEDIUM with certainty
33		0,772	0,604	0,440	0,525
34	Reliable diagnosis	MEDIUM with certainty	SMALL with certainty	SMALL with certainty	MEDIUM with certainty
35		0,772	0,604	0,560	0,525

Fig. 15. Diagnostic advice information from this model of XAI-based

Two models were programmed and tested according to the same functional organization of the XAI-based MDSS. The first one was programmed in Excel environment and was called GERI-VYRAI. In this case the end user's interface is Lithuanian. (Reference: GERI-VYRAI-G –Microsoft Excel ****; open access unavailable because of lasting process of commercialization). Another version of the similar model used Visual Studio 2019 Community Edition for programming. The bilingual English and Lithuanian user's interface is built as ASP.NET Core 3.1 Web Application, and the programmed. NET Standard 2.0 Class Library module was used to perform calculations. This version is more flexible for researchers and in general is more convenient for end users. (Reference: https://GERIMODIS- **** and the open access is unavailable for the reason mentioned above). Fig. 16 shows their initial user access windows for both versions of the model.

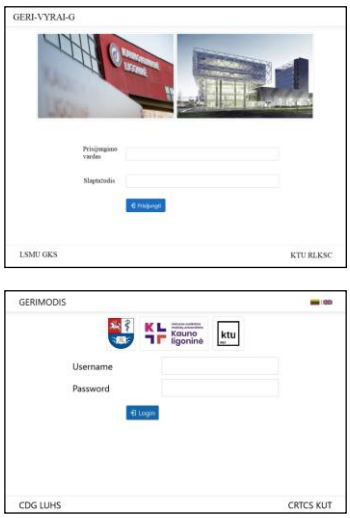

Fig. 16 User access windows of two XAI-based MDSS for geriatrics.

It is important to note that during the initial testing, the model was used by both: experienced professionals and trainees, as well as several students. The general opinion is that 1) the diagnoses presented by the model correlate well with the diagnoses of specialists, and 2) that it is convenient to work with such a tool. This suggests that the model deserves further practical research and development to be incorporated into geriatric practice and commercialized accordingly.

V. COCNCLUSION AND FUTURE WORKS

This article proposes a broader development of XAI-based medical diagnostic and decision support systems in geriatrics. To this end, a formal description of the functional organization of a possible structure for such an XAI-based MDSS was created and presented and two models of such a system were developed and tested.

The first preliminary experiments demonstrated and confirmed the viability of the idea, demonstrated a potential breakthrough in the implementation of artificial intelligence-based systems and tools in geriatric practice.

In the near future, the development of the model idea is expected in two directions: the first is research into the effectiveness of the tool model in assessing everyday individual cases, and the second is research into various aspects of the diagnostic methodology itself.

It is anticipated that the models already developed at this stage can be effectively used to train students and improve staff skills.

REFERENCES

[1] 2020 IEEE Congress on Evolutionary Computation (CEC) IEEE Catalog Number: CFP20ICE-ART ISBN: 978-1-7281-6929-3.

[2] 2020 IEEE International Conference on Fuzzy Systems (FUZZ-IEEE) IEEE Catalog Number: CFP20FUZ-ART ISBN: 978-1-7281-6932-3.

[3] 2020 International Joint Conference on Neural Networks (IJCNN)IEEE Catalog Number: CFP20IJS-ART ISBN: 978-1-7281-6926-2.

[4] M. Lindgren, Glory and Failure: The Difference Engines of Johann Müller, Charles Babbage, and Georg and Edvard Scheutz. Trans. McKay, Craig G. Cambridge, Massachusetts: MIT Press, 1990.

[5] M. Trazzi and R. V. Yampolskiy, Artificial Stupidity: Data We Need to Make Machines Our Equals, PATTERNS, Volume 1, Issue 2, 8 May 2020, https://doi.org/10.1016/j.patter.2020.100021.

[6] [6]. S. T. Mueller, R. R. Hoffman, W. Clancey, A. Emrey, G. Klein, Explanation in Human-AI Systems: A Literature Meta-Review Synopsis of Key Ideas and Publications and Bibliography for Explainable AI, DARPA XAI Program February 2019, 204 p. p.

[7] D. Gunning, Explainable Artificial Intelligence (XAI), Information Innovation Office (I2O) Defense Advanced Research Projects Agency (DARPA), www.darpa.mil (Approved for public release: distribution unlimited). 18p.p. https://www.cc.gatech.edu/~alanwags/DLAI2016/(Gunning)%20IJCAI-16%20DLAI%20WS.pdf

[8] A. Nau, Trends in Machine Learning and Data Analytics, WS 2019/20, 25p. p.

[9] A. Adadi and M. Berrada, Peeking Inside the Black-Box: A Survey on Explainable Artificial Intelligence (XAI), in IEEE Access, vol. 6, pp. 52138-52160, 2018, doi: 10.1109/ACCESS.2018.2870052.

[10] A. B. Arrieta , N. Díaz-Rodríguez, J. Del Ser, A. Bennetot, S. Tabik, A. Barbado, S. Garcia, S. Gil-Lopez , D. Molina, R. Benjamins, R. Chatila, F. Herrera, Explainable Artificial Intelligence (XAI): Concepts, taxonomies, opportunities and challenges toward responsible AI, Information Fusion journal homepage: www.elsevier.com/locate/inffus , Information Fusion 58 (2020) 82–115p.

[11] M. Chromik, M. Schuessler, A Taxonomy for Human Subject Evaluation of Black-Box Explanations in XAI, Proceedings of the IUI workshop on Explainable Smart Systems and Algorithmic Transparency in Emerging Technologies (ExSS-ATEC'20) Cagliari, Italy. 7 p. p.

[12] F. Xu, H. Uszkoreit, Y. Du, W. Fan, D. Zhao, J. Zhu (2019) Explainable AI: A Brief Survey on History, Research Areas, Approaches and Challenges. In: Tang J., Kan MY., Zhao D., Li S., Zan H. (eds) Natural Language Processing and Chinese Computing. NLPCC 2019. Lecture Notes in Computer Science, vol 11839. Springer, Cham. http://doi-org-443.webvpn.fjmu.edu.cn/10.1007/978-3-030-32236-6_51.

[13] E. B. Sloanea, R. J. Silva, Artificial intelligence in medical devices and clinical decision support systems, Clinical Engineering Handbook. 2020 : 556–568. Published online 2019 Dec. 6doi: 10.1016/B978-0-12-813467-2.00084-5

[14] S. Montani, M. Striani, Artificial Intelligence in Clinical Decision Support: a Focused Literature Survey. Yearb Med Inform. 2019 Aug; 28(1): 120–127. Published online 2019 Aug 16. doi: 10.1055/s-0039-1677911

[15] [U. Pawar, D. O'Shea, S. Rea and R. O'Reilly, "Explainable AI in Healthcare," 2020 International Conference on Cyber Situational Awareness, Data Analytics and Assessment (CyberSA), Dublin, Ireland, 2020, pp. 1-2, doi: 10.1109/CyberSA49311.2020.9139655.

[16] E. Tjoa, C. Guan, A Survey on Explainable Artificial Intelligence (XAI): towards Medical XAI, JOURNAL OF LATEX CLASS FILES, VOL. 14, NO. 8, AUGUST 2015, 23 p. p.

[17] S. N. Payrovnaziri, Z. Chen, P. Rengifo-Moreno, T . Miller, J. Bian, J. H. Chen, X. Liu, Z. He. Explainable artificial intelligence models using real-world electronic health record data: a systematic scoping review. J Am Med Inform Assoc. 2020 Jul 1;27(7):1173-1185. doi: 10.1093/jamia/ocaa053. PMID: 32417928.

[18] Y. Xie, X. 'A.' Chen, G. Gao, Outlining the Design Space of Explainable Intelligent Systems for Medical Diagnosis, IUI Workshops'19, March 20, 2019, Los Angeles, USA , 8 p. p.

[19] V. Lesauskaitė, G. Damulevičienė, J. Knašienė, E. Kazanavičius, A. Liutkevičius, A. Janavičiūtė. Older adults – potential users of technologies // Medicina. Basel: MDPI AG. ISSN 1010-660X. eISSN 1648-9144. 2019, vol. 55, no. 6, art. no. 253, p. [1-9]. DOI: 10.3390/medicina55060253.

[20] J. Knasiene, R. Zilinskiene, A. Abramaviciute. A prospective cross-sectional study of hyponatremia among elderly patients in the Department of Geriatrics at Kaunas Clinical Hospital. European Geriatric Medicine, September 2017, Vol. 8, Suppl. 1, S121

[21] C. S. Stylios and V. C. Georgopoulos, "Fuzzy Cognitive Maps for Medical Decision Support — A paradigm from obstetrics," 2010 Annual International Conference of the IEEE Engineering in Medicine and Biology, Buenos Aires, 2010, pp. 1174-1177, doi: 10.1109/IEMBS.2010.5626239.

[22] G. Damulevičienė, D. Leskauskaitė, J. Knašienė, M. Keršienė, P. Štreimikytė, V. Lesauskaitė. Digestibility of texture modified protein-based beverages for elderly people with oropharyngeal dysphagia. ClinNutr 2018; 37(1):S60-S61. https://www.clinicalnutritionjournal.com/article/S0261-5614(18)31534-6/fulltext.

[23] A. S. Billis, E. I. Papageorgiou, C. A. Frantzidis, M. S. Tsatali, A. C. Tsolaki, P. D. Bamidis. A decision-support framework for promoting independent living and ageing well. IEEE J Biomed Health Inform. 2015 Jan;19(1):199-209. doi: 10.1109/JBHI.2014.2336757. Epub 2014 Jul 25. PMID: 25073180.

[24] L. W. Baijens, P. Clavé, P.Cras, O. Ekberg, A. Forster, G. F. Kolb, J. C. Leners, S. Masiero, J. Mateos-Nozal, O. Ortega, D. G. Smithard, R. Speyer, M. Walshe. European Society for Swallowing Disorders - European Union Geriatric Medicine Society white paper: oropharyngeal dysphagia as a geriatric syndrome. Clin Interv Aging. 2016 Oct 7;11:1403-1428. doi: 10.2147/CIA.S107750. PMID: 27785002; PMCID: PMC5063605.

[25] R. Jasinevicius, V. Petrauskas, On Fundamentals of Global Systems Control Science (GSCS), ISCS 2013: Interdisciplinary Symposium on Complex Systems, Eds. Ali Sanayei, IvanZ elinka, Otto E. Rossler, Springer, 2014, 77 – 87p.

[26] V. Petrauskas, R. Jasinevicius, E., Kazanavicius, Z. Meskauskas, Concept of a System Using a Dynamic SWOT Analysis Network for Fuzzy Control of Risk in Complex Environments, Mathematics and Computer Science (MCS). Mathematics and Computer Science. Vol. 5, No. 2, 2020, pp. 42-55.doi: 10.11648/j.mcs.20200502.11 (ISSN Print: 2575-6036; ISSN Online: 2575-6028), 2020.

[27] D. Hillson, Effective, Opportunity Management for Projects: Exploiting Positive Risk, Marcel Dekker, Inc., 2004, p. 316.

[28] V. Petrauskas, R. Jasinevičius, E. Kazanavicius, Z. Meskauskas, CWW elements to enrich SWOT analysis, Journal of Intelligent and Fuzzy Systems, vol. 34, no. 1, pp. 307-320, 2018.

[29] Z. Meskauskas, R. Jasinevicius, E. Kazanavicius, V. Petrauskas, XAI-Based Fuzzy SWOT Maps for Analysis of Complex Systems 2020 IEEE International Conference on Fuzzy Systems (FUZZ-IEEE): Proceedings of 2020 IEEE International Conference on Fuzzy Systems (FUZZ-IEEE)IEEE Catalog Number: CFP20FUZ-ART ISBN: 978-1-7281-6932-3; 8p.p

[30] B. Vellas, H. Villars, G. Abellan, M. E. Soto, Y. Rolland, Y. Guigoz, J. E. Morley, W. Chumlea, A. Salva, L. Z. Rubenstein, P. Garry. Overview of the MNA--Its history and challenges. J Nutr Health Aging. 2006 Nov-Dec;10(6):456-63; discussion 463-5. PMID: 17183418.

[31] L. Z. Rubenstein, J. O. Harker, A. Salvà, Y. Guigoz, B. Vellas. Screening for undernutrition in geriatric practice: developing the short-form mini-nutritional assessment (MNA-SF). J Gerontol A Biol Sci Med Sci. 2001 Jun;56(6):M366-72. doi: 10.1093/gerona/56.6.m366. PMID: 11382797.

[32] Y. Guigoz Y. The Mini Nutritional Assessment (MNA) review of the literature--What does it tell us? J Nutr Health Aging. 2006 Nov-Dec;10(6):466-85; discussion 485-7. PMID: 17183419.

[33] M. J. Kaiser, J. M Bauer, C. Ramsch, W. Uter, Y. Guigoz, T. Cederholm, D. R. Thomas, P. Anthony, K. E. Charlton, M. Maggio, A. C. Tsai, D. Grathwohl, B. Vellas C. C. Sieber, MNA-International Group. Validation of the Mini Nutritional Assessment short-form (MNA-SF): a practical tool for identification of nutritional status. J Nutr Health Aging. 2009 Nov;13(9):782-8. doi: 10.1007/s12603-009-0214-7. PMID: 19812868.

[34] P. C. Belafsky, D. A. Mouadeb, C. J. Rees, J. C. Pryo, G. N. Postma, J. Allen, and R. J. Leonard. Validity and reliability of the Eating Assessment Tool (EAT-10). AnnOtolRhinolLaryngol117: 919-924, 2008.

[35] R. Stockdell, E. J. Amella. The Edinburgh Feeding Evaluation in Dementia Scale: determining how much help people with dementia need at mealtime. Am J Nurs. 2008 Aug;108(8):46-54; quiz 55. doi: 10.1097/01.NAJ.0000327831.51782.8e. PMID: 18664760.

[36] D. Volkert, A. M. Beck, T. Cederholm, A. Cruz-JentoftA, S. Goisser, L. Hooper, E. Kiesswetter, M. Maggio, A. Raynaud-Simon, C. C. Sieber, L. Sobotka, D. van Asselt, R. Wirth, S. C. Bischoff SC. ESPEN guideline on clinical nutrition and hydration in geriatrics. Clin Nutr. 2019 Feb;38(1):10-47. doi: 10.1016/j.clnu.2018.05.024. Epub 2018 Jun 18. PMID: 30005900.

AUTHORS

First Author – Vytautas Petrauskas, Associate Professor, Project Researcher, Centre of Real Time Computer Systems at Kaunas University of Technology, Email address: vytautas.petrauskas@ktu.lt.

Second Author – Gyte Damuleviciene, Professor, Lithuanian University of Health Sciences, Email address: gyte.damuleviciene@lsmuni.lt .
Third Author – Algirdas Dobrivolskis, Lecturer, Project Junior Researcher, Centre of Real Time Computer Systems at Kaunas University of Technology, Email address: algirdas.dobrovolskis@ktu.lt.
Fourth Author – Juozas Dovydaitis, Engineer**,** Project Junior Researcher, Centre of Real Time Computer Systems at Kaunas University of Technology, Email address: juozas.dovydaitis@ktu.lt.
Fifth Author – Audrone Janaviciute, Associate Professor, Project Junior Researcher, Centre of Real Time Computer Systems at Kaunas University of Technology, Email address: audrone.janaviciute@ktu.lt.
Sixth Author – Raimundas Jasinevicius, Professor, Project Researcher, Centre of Real Time Computer Systems at Kaunas University of Technology, Email address: raimundas.jasinevicius@ktu.lt.
Seventh Author – Egidijus Kazanavicius, Professor, Head of Centre, Centre of Real Time Computer Systems at Kaunas University of Technology, Email address: egidijus.kazanavicius@ktu.lt.
Eighth Author – Jurgita Knasiene, Lecturer, Lithuanian University of Health Sciences, Email address: jurgita.knasiene@lsmuni.lt .
Ninth Author – Vita Lesauskaite, Professor, Lithuanian University of Health Sciences, Email address: vita.lesauskaite@lsmuni.lt .
Tenth Author – Agnius Liutkevicius, Professor, Project Senior Researcher, Centre of Real Time Computer Systems at Kaunas University of Technology, Email address: agnius.liutkevicius@ktu.lt.
Eleventh Author – Zygimantas Meskauskas, Engineer**,** Project Junior Researcher, Centre of Real Time Computer Systems at Kaunas University of Technology, Email address: zygimantas.meskauskas@ktu.lt.

Correspondence Author – Vytautas Petrauskas, email address vytautas.petrauskas@ktu.lt, alternate email address vytaupetra@gmail.com.