Static Synchronous Compensator (STATCOM) Modeling for Power Oscillations Damping

ANIL KUMAR YADAV*, HARIOM RATHAUR**, AMBREESH KR. SINGH***

*EE, Kali Charan Nigam Institute of Technology, Banda, U.P.
**EE, HOD, Kali Charan Nigam Institute of Technology, Banda, U.P.
***EE, Kali Charan Nigam Institute of Technology, Banda, U.P.

Abstract- The prime motto of present paper is to find out the enhancement of damping the power system oscillation through co-ordinated model of 'Static Synchronous Compensator' (STATCOM) situated in shunt with transmission line. This paper also stabilizer the linearized 'Phillips-Heffron' model of a power system installed with a STATCOM and demonstrates the application of the model in anylizing the damping effect of the STATCOM and designing a 'STATCOM' stabilizer to improve power system oscillation stability of single machine infinite-bus system by using 'MATLAB'

The effectiveness of proposed controller in damping the low frequency oscillations and hence improving power system dynamic stability have been identified via eigenvalues analysis and simulation result with different system conditions and under different line loading.

Keywords:- FACTS Devices, MATLAB, STATCOM, POD

I. INTRODUCTION

Today, the power system are complicated network with thousands of buses and hundreds of generating stations and load centers being interconnected through power transmission lines. An electric power system can be subdivided into four parts (i) generation system (ii) transmission system (iii) distribution system (iv) load system (utilization) .The basic structure of a power system is shown in fig.1

In power system the low frequency oscillation are inherent due sudden change of load, machine output, faults occurs on the transmission and machine and such frequent occurrence. Satisfactory damping of the power system oscillations therefore is an important issue when dealing with rotor angle (phase angle) stability of the power system. So recently, Flexible AC transmission system (FACTS) controllers have been proposed to enhance the transient or dynamic stability of power system.

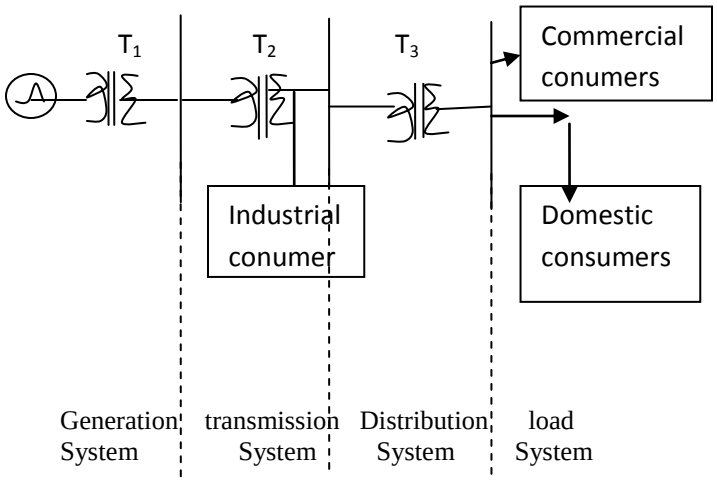

Fig.1 Typical power system

During the last decade, a number of control devices under the terms FACTS technology have been proposed and used. Among all FACTS devices, static synchronous compensators (STATCOM) plays great role in reactive power compensation and voltage support because of its altercative steady state performance and operating characteristics.

The STATCOM is one of the most important shunt connected FACTS controllers to control the power flow and make better transients stability. A STATCOM is a controlled reactive power source. It provides voltage supports by generating or absorbing capacitor banks.

STATCOM has three operating parts: (i) STATIC: based on solid state switching devices with no rotating components, (ii) SYNCHRONOUS: analogous to an ideal synchronous machine with 3 sinusoidal phase voltage at fundamental frequency, (iii) COMPENSATOR: rendered with reactive compensation.

II. SINGLE- MACHINE INFINITE BUS POWER CONNECTED WITH A STATCOM

Fig.2 show a single-machine infinite-bus power system connected with a STATCOM which consists of a step-down transformer (SDT) with a leakage reactance X_{SDT}, a three phase GTO-based voltage source converter (VSC) and a DC capacitor. The SVC generates a controllable AC-voltage source

$V_0(t) = V_0 Sin(\omega t - \psi)$ bhind the leakage reactance. The voltage difference between the STATCOM –bus AC voltage $V_L(t) and V_0(t)$ produces active and reactive power exchange between the STATCOM and the power system, which can be controlled by adjusting the magnitude V_0 and phase ψ in fig.2

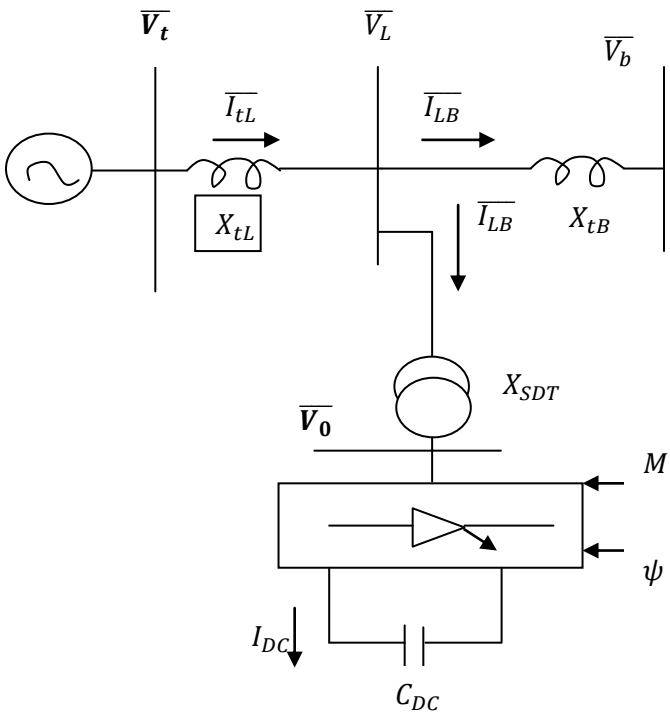

Fig.2 a STATCOM connected in a single-machine infinite-bus power system

$$\overline{V_0} = c\ V_{DC}\ (Cos\varphi + J\sin\varphi) = cV_{DC}\ \angle\varphi \qquad 1$$

$$\frac{d\,v_{DC}}{dt} = \frac{I_{DC}}{c_{DC}} = \frac{c}{c_{DC}}\left(I_{Lod}\ Cos\varphi + J\ I_{Loq}\ \sin\varphi\right) \qquad 2$$

$$c = m\,k,$$

K is ratio between A C & D C Voltage
m = modulation ratio defined by the PWM.
And φ is defined by P W M.

$$\overline{I_{LB}} = I_{tL} - \overline{I_{Lo}}$$

$$= \overline{I_{tL}} - \frac{\overline{V_L} - \overline{V_O}}{J\,x_{SDT}}$$

$$\overline{I_{LB}} = \overline{I_{tL}} - \frac{\overline{V_t} - JX_{tL}I_{tL} - \overline{V_o}}{J\,x_{SDT}} \qquad (3)$$

from fig.

$$\xrightarrow[V_t]{} = J\,x_{tL}\ I_{tL} + J\ X_{LB}\ I_{LB} + \overline{V_B} \qquad (4)$$

$$I_{LO} = \frac{V_L - V_O}{X_{SDT}}$$

$$V_L = V_t - J\ X_{tL}\ I_{tL}$$

$$I_{tLd} = \frac{\left(1 + \frac{X_{LB}}{X_{SDT}}\right)E'_q - \frac{X_{LB}}{X_{SDT}}\ cV_{DC}\ Sin\varphi - V_B\ Cos\delta}{X_{tL}\left(1 + \frac{X_{LB}}{X_{SDT}}\right) + X_{LB} + \left(1 + \frac{X_{LB}}{X_{SDT}}\right)X'_d}$$

$$I_{tLd} = \frac{\left(1 + \frac{X_{LB}}{X_{SDT}}\right)E'_q - \frac{X_{LB}}{X_{SDT}}cV_{DC}\ Sin\varphi - V_B\ Cos\delta}{X_{tL} + X_{tL}\frac{X_{LB}}{X_{SDT}} + X_{LB} + \left(1 + \frac{X_{LB}}{X_{SDT}}\right)X'_d} \quad -----(5)$$

The Non linear mode of the Power System is

$$\dot{\delta} = \omega_b\ \omega$$

$$\dot{\omega} = \left(P_m - P_e - D\omega\right)/m$$

$$\backslash\dot{E}'_q = \left(-E_q + E_{fd}\right)/T'd_0$$

$$\dot{E}_{fd} = -\frac{1}{T_A}E_{fd} + \frac{K_A}{T_A}\left(V_{t0} - V_t\right) \quad ----(6)$$

Where

$$P_e = E'_q\ I_{tLq} + \left(X_q - X'_d\right)I_{tLd}\ I_{tLq}$$

$$E_q = E'_q + \left(X_d - X'_d\right)I_{tLd}$$

$$V_t = \sqrt{\left(E'_q - X'_d\ I_{tLd}\right)^2 + \left(X_q I_{tLq}\right)^2}$$

By linearising eq.5 & 6 it is possible to obtain

$$\left.\begin{aligned}
\Delta\dot{\delta} &= \omega_b\,\Delta\omega \\
\Delta\dot{\omega} &= \left(-\Delta P_e - D\Delta\omega\right)/M \\
\Delta\dot{E}_q^{'} &= \left(-\Delta E_q + D\,E_{fd}\right)/T_{d0}^{'} \\
\Delta\dot{E}_{fd} &= -\frac{1}{T_A}\Delta E_{fd} + \frac{K_A}{T_A}\Delta V_t
\end{aligned}\right\} \quad \ldots\ldots\ldots..(7)$$

Where

$$\Delta P_e = K_1\Delta\delta + K_2\Delta E_q' + K_{PDC}\Delta V_{DC} + K_{PC}\Delta C + K_{P\psi}\Delta\psi \quad \ldots\ldots\ldots\ldots\ldots\ldots\ldots.. \quad (8)$$

$$\Delta E_q' = K_4\Delta\delta + K_3\Delta E_q' + K_{qDC}\Delta V_{DC} + K_{qC}\Delta C + K_{q\psi}\Delta\psi \quad \ldots\ldots\ldots\ldots\ldots\ldots\ldots.. \quad (9)$$

$$\Delta E_q' = K_4\Delta\delta + K_3\Delta E_q' + K_{qDC}\Delta V_{DC} + K_{qC}\Delta C + K_{q\psi}\Delta\psi \quad \ldots\ldots\ldots\ldots\ldots\ldots\ldots.. \quad (9)$$

$$\Delta V_t = K_5\Delta\delta + K_6\Delta E_q' + K_{vDC}\Delta V_{DC} + K_{vC}\Delta C + K_{v\psi}\Delta\psi \quad \ldots\ldots\ldots\ldots\ldots\ldots\ldots.. \quad (10)$$

Type equation here.

$$\begin{bmatrix}\Delta\dot{\delta}\\ \Delta\dot{\omega}\\ \Delta\dot{E}_q'\\ \Delta\dot{E}_{fd}\end{bmatrix} = \begin{bmatrix} 0 & \omega_b & 0 & 0 \\ \frac{-k_1}{M} & -\frac{D}{M} & \frac{-k_2}{M} & 0 \\ \frac{-k_1}{T_{do}} & 0 & -\frac{k_3}{T_{do}} & \frac{1}{T_{do}^{'}}\end{bmatrix}\begin{bmatrix}\Delta\delta\\ \Delta\omega\\ \Delta E_q'\\ \Delta E_{fd}\end{bmatrix} + \begin{bmatrix} 0 \\ \frac{-k_{PDC}}{M} \\ -\frac{k_{qDC}}{M} \\ -\frac{k_A k_{VDC}}{T_A}\end{bmatrix}\Delta V_{Dc}\begin{bmatrix} 0 & 0 \\ \frac{-k_{pc}}{M} & -\frac{k_{p\psi}}{M} \\ \frac{-k_{qc}}{T_{do}'} & -\frac{k_{q\psi}}{M} \\ -\frac{k_A k_{VC}}{T_A} & -\frac{k_A k_{V\psi}}{T_A}\end{bmatrix}\begin{bmatrix}\Delta C\\ \Delta\psi\end{bmatrix}$$

By denoting

$$\Delta f_* = [\Delta V_{DC} \quad \Delta C \quad \Delta\psi]$$

$$K_P = \begin{bmatrix}\frac{K_{PDC}}{M}\\ \frac{K_{PC}}{M}\\ \frac{K_{P\psi}}{M}\end{bmatrix}, \quad K_q = \begin{bmatrix}\frac{K_{qDC}}{T_{do}^{'}}\\ \frac{K_{qC}}{T_{do}^{'}}\\ \frac{K_{q\psi}}{T_{do}^{'}}\end{bmatrix}, \quad K_V = \begin{bmatrix}\frac{K_A K_{vDC}}{T_A}\\ \frac{K_A K_{vC}}{T_A}\\ \frac{K_A K_{v\psi}}{T_A}\end{bmatrix}$$

From $\overline{I_{LO}} = \overline{V_t} - Jx_{tL}\overline{I_{tL}} - \overline{V_0}/JX_{SDT}$ can obtain

$$I_{LOq} = \frac{cV_{DC}COS\psi}{X_{SDT}} - \frac{x_q + x_{tL}}{X_{SDT}} I_{tLq}$$

$$I_{LOd} = \frac{E_q'}{X_{SDT}} - \frac{x_q' + x_{tL}}{X_{SDT}} I_{tLq} - \frac{cV_{DC}Sin\psi}{X_{SDT}} \quad \ldots\ldots\ldots..(11)$$

Hence linearising the fourth eq. 1,4 and 11 can obtains

$$\Delta\dot{V_{DC}} = K_7\Delta\delta + K_8\Delta E_q' + K_9\Delta V_{DC} + K_{dC}\Delta C + K_{d\psi}\Delta\psi \quad \ldots\ldots\ldots\ldots\ldots\ldots\ldots.. \quad (12)$$

So the full state system model can be obtained as follows:-

$$\begin{bmatrix}\Delta\dot{\delta}\\ \Delta\dot{\omega}\\ \Delta\dot{E}_q^{'}\\ \Delta\dot{E}_{fd}\\ \Delta\dot{V}_{dc}\end{bmatrix} = \begin{bmatrix} 0 & \omega_b & 0 & 0 & 0 \\ -\frac{K_1}{M} & -\frac{D}{M} & -\frac{K_2}{M} & 0 & -\frac{K_{PDC}}{M} \\ -\frac{K_4}{T_{do}^{'}} & 0 & -\frac{K_3}{T_{do}^{'}} & \frac{1}{T_{do}^{'}} & -\frac{K_{qDC}}{T_{do}^{'}} \\ -\frac{K_A K_5}{T_A} & 0 & -\frac{K_A K_6}{T_A} & -\frac{1}{T_A} & -\frac{K_A K_{vDC}}{T_A} \\ K_7 & & K_8 & 0 & K_9\end{bmatrix} \times \begin{bmatrix}\Delta\delta\\ \Delta\omega\\ \Delta E_q^{'}\\ \Delta E_{fd}\\ \Delta V_{dc}\end{bmatrix} + \begin{bmatrix} 0 & 0 \\ -\frac{K_{PC}}{M} & -\frac{K_{P\psi}}{M} \\ -\frac{K_{qC}}{T_{do}^{'}} & -\frac{K_{q\psi}}{T_{do}^{'}} \\ -\frac{K_A K_{vC}}{T_A} & -\frac{K_A K_{v\psi}}{T_A} \\ K_{dc} & K_{d\psi}\end{bmatrix}\begin{bmatrix}\Delta C\\ \Delta\psi\end{bmatrix}$$

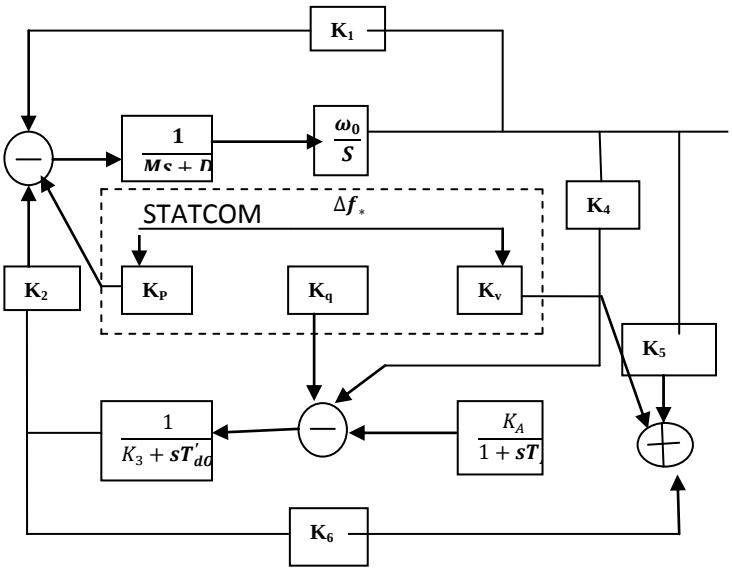

FIG.3 Phillips-Heffron model of a single-machine infinite-bus power system connected with a STATCOM

III. POWER OSCILLATION DAMPING CONTOLLER

The dynamic characteristics of system can be influenced by location of eigenvalues, for a good system response in terms of overshoots/undershoot and settling time, a particular location for system eigenvalues is desired depending upon the operating conditions of the system. The damping power and the synchronizing power are related respectively, to real part and imaginary part of eigenvalue that correspond to incremental change in the deviation of the rotor speed and deviation of rotor angle, power oscillation damping can be improved if real part of eigenvalue associated with mode of oscillation can be shifted to left-side in complex S-plane as desired. This paper presents an STATCOM based POD controller such that the closed loop designed system will have a desired degree of stability. Controller is designed to increase the damping of both the local mode of low frequency power oscillations.

The controller shown has to be analyzed for performance evaluation. This has been attempted on a simple system. The expectation from STATCOM based POD controller is to provide instantaneous solution to power oscillation damping, the settling time as obtain from response of system is expected to be as small as possible. For minimizing settling time real part of eigenvalue corresponding to mode of oscillation are required to be shifted more and more on LHS of complex plane, this will require control effort. There is a hardware limit of any designed controller, for the case of STATCOM, in view of this, the control input parameters m and X_{SDT} should be within their limit and the voltage of the DC link capacitor V_{dc} should be kept constant.

IV. Result and Simulation software

The single machine is running with load. The eigenvalues with STATCOM POD controller at damping constants equal 2for SMIB system.

RESULT:-

WHEN DAMPING CONSTANT = 2

Without STATCOM	-98.8600
With STATCOM	- 98.6764
With POD	-98.8600

WHEN DAMPING CONSTANT = 3

Without STATCOM	-98.8539
With STATCOM	- 98.6815
With POD	-98.8539

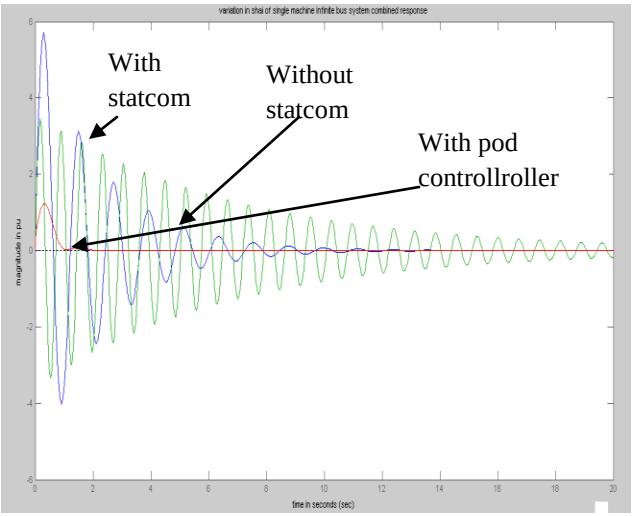

Fig. (a) variation of SMIB system combined response.

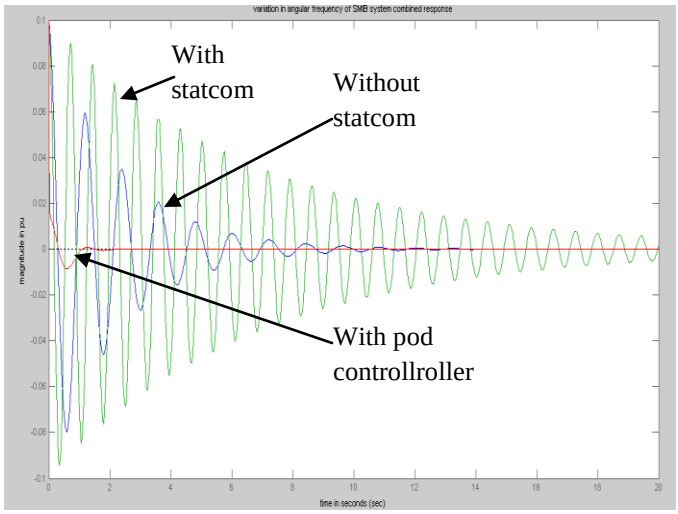

Fig.(c) varition of angular frequency of SMIB system combines response.

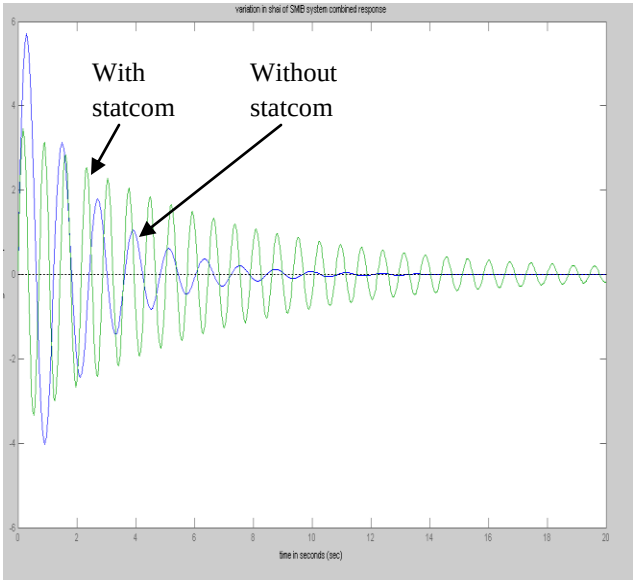

Fig.(b) varition of shai (phase angle) of SMIB system Combined response.

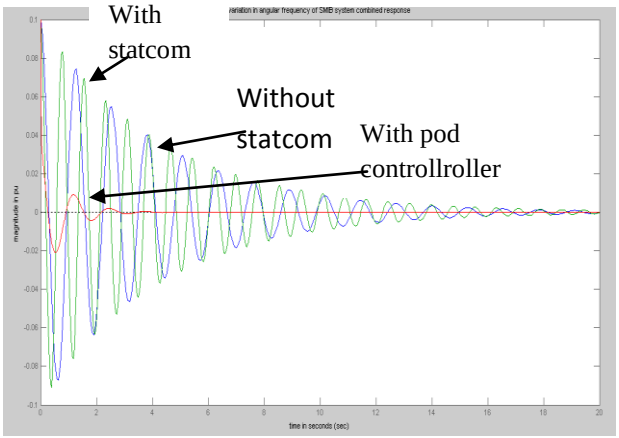

fig.(d) varition of of shai of SMIB system combined response.

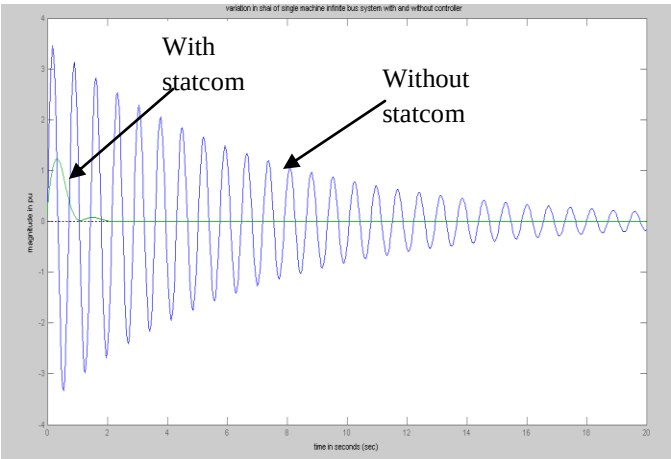

Fig.(e) variation of shai of SMIB system with and without controller

Fig: 4 (a,b,c,d,e) Response at D = 2 and load = 1pu

When damping constant is 3 .

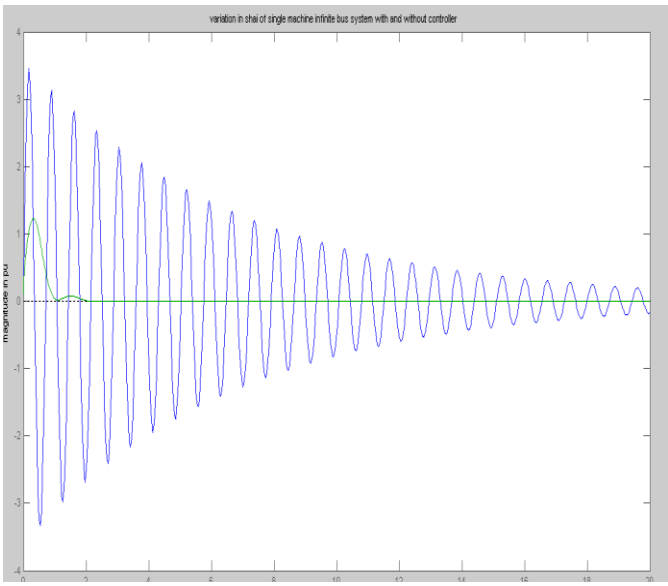

Fig.(a) variation of shai of SMIB system combined response

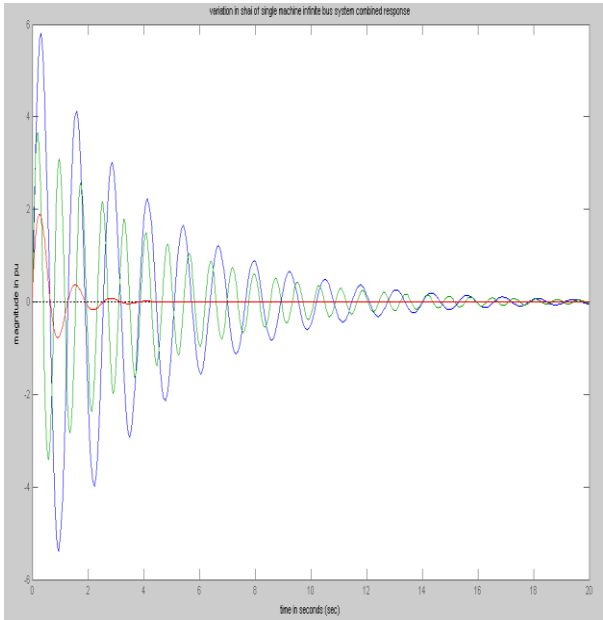

Fig. (b) variation of SMIB system combined response.

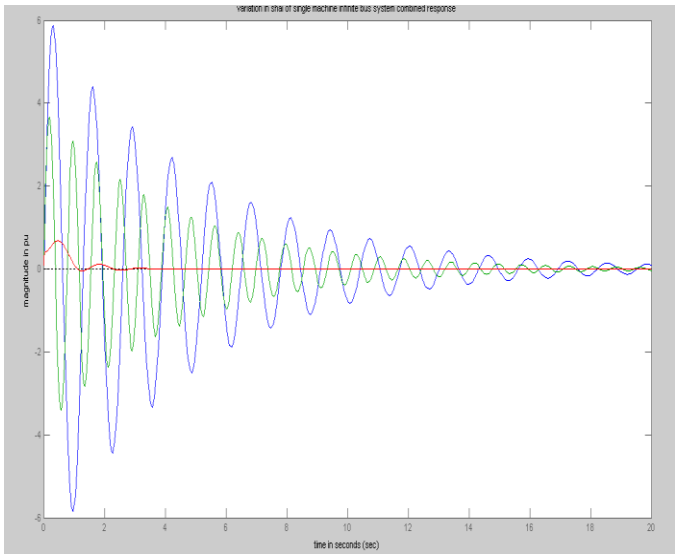

Fig (c) variation of shai of SMIB system combined response

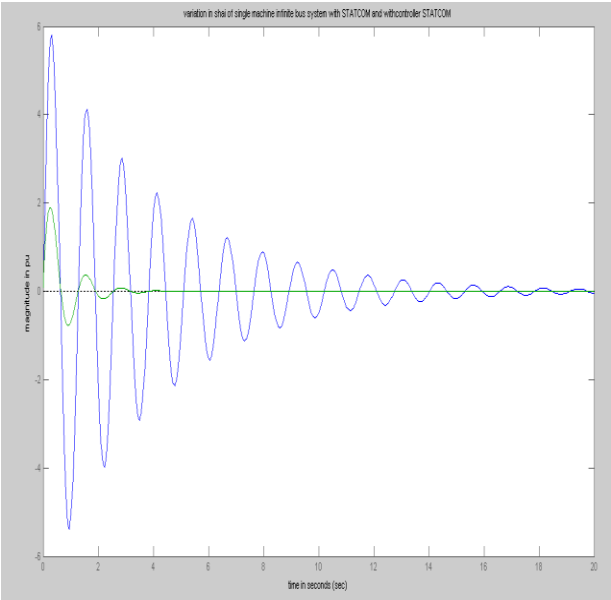

Fig.(d) variation of shai of SMIB system with and without controller

fig.5(a,b,c,d) response at d = 3 and m = 0.8 ,phase angle of statcom =90 , load pu =0.8 and pf lag = 0.85

References

[1] WANG, H.F.,and SWIFT, F.J,: 'An unified model for the analysis of FACTS devices in damping power system oscillations. Part I: single-machine-bus power system', *IEEE Trans*. Pwr. Deliv., 1997,12,(2),pp. 941-926.

[2] Modeling STATECOM into power system: H. F. Wang University of both, Bath BA2 7AY,UK.

[3] P.M. Anderson and A.A. Fouad, 1994, Power System Control and Stability, *IEEE* Press,

[4] Rogers G.; Power System Oscillations, 2000, Kluwer Academic publishers.

[5] H. F. Wang, July 2000, "A Unified model for the analysis of FACTS devices in damping power system oscillations-Part III: Unified power flow controller," *IEEE Trans*. On Power Delivery, vol. 15, no. 3, pp 978-983.

[6] H.F. Wang, Sept. 1999, "Phillips-Heffron model of power system installed with STATCOM and applications." *IEEE Proc*.-Geer, Trans. Distr, Vol. 146 No. 5.

[7] Damping of Power System Oscillation by using co-ordinated tuning of POD and PSS with STATCOM by, A.S.P. Kanojia and B.Dr. V.K. Chandrakar.

Appendix

Parameters of example single-machine infinite-bus power system (in p.u. except indicateded)

System Data :

Generator Data:

M=2H, H=3 MJ/MVA,

$$E_q' = 1.0,\ X_d = 0.6, X_d' = 0.3, T_{d0}' = 5.044$$

$$K_a = 10, X_{XDT} = 0.15, X_{tL} = 0.3, X_{LB} = 0.3$$

$$V_b = 1.0\,, \qquad frequency = 50\ HZ$$

$$V_{DC} = 1.0,\ \ C_{DC} = 1.0$$

Authors

First Author – Anil Kumar Yadav, B.Tech, M.Tech (Pursuing), Kali Charan Nigam Institute Of Technology and anilrdps@gmail.com.

Second Author – Hariom Rathaur (Asist. Prof.), M. Tech., Kali Charan Nigam Institute Of Technology, hariom_rathaur@rediffmail.com.

Third Author – Ambreesh Kumar Singh, B.Tech, M.E. (Pursuing) Kali Charan Nigam Institute of Technology, Banda, U.P. ambreesh.singh@gmail.com

Correspondence Author – Anil Kumar Yadav, B.Tech, M.Tech(Pursuing) ,Kali Charan Nigam Institute Of Technology and anilrdps@gmail.com. OR anilrdps@rediffmail.com contact no. 09415275758 OR O9454670284
.