Optimised Direct Torque Control of Induction Motor For Electric Vehicle Propulsion

Arya Gowri G.
Dept.of Electrical and Electronics
Rajiv Gandhi Institute of Technology
Kottayam, Kerala
Email:gauri.arya@yahoo.com

Prince A.
Associate Professor
Dept. of Electrical and Electronics
Rajiv Gandhi Institute of Technology
Kottayam, Kerala

***Abstract*—This paper presents Electric Vehicle (EV) propulsion using a three phase squirrel cage induction motor. The motor control at different operating conditions is carried out by a direct torque control technique with an energy optimization strategy. The operating flux of the motor is chosen optimally using model based control strategy. Simulation tests have been carried out using MATLAB SIMULINK to check the consistency and performance of the proposed scheme.**

Keywords—induction motor; EV propulsion; DTC; loss minimization;optimisation.

INTRODUCTION

Electric Vehicles (EVs) [1] are a solution for the environmental problems caused by vehicles with internal combustion engines. The advantages of EVs include energy efficiency, virtually lack of pollution, and the availability of electric energy through electric distribution systems. Among disadvantages, they have low energy density and long charging time for the present batteries. Hence, optimal energy management is very important in EVs. The other major factors include optimum design of the motor, selection of a proper drive, and optimal control strategy.

The electric propulsion system of EV consists of the motor drive, transmission device, and wheels. The motor drive, comprising of the electric motor, power converter, and electronic controller, is the core of the EV propulsion system. Desired features of the propulsion system (motor) for an EV are high ratio of "torque/inertia" and "power/weight," high maximum torque capability, high speed, low level of audible noise, low maintenance, small size, low weight, reasonable cost, high efficiency over low-and high-speed ranges, energy recovery on braking, and non sensitivity to acceleration forces. Squirrel-cage induction motors have most of the above-mentioned features.

Among the various control techniques available Direct Torque Control (DTC) appears to be very convenient for EV propulsion. The input currents are measured; flux, torque are estimated. The reference speed which is directly applied by the pedal of the vehicle is the input of the motor controller. [2][3]

Furthermore, DTC typical advantages are not sufficient. EVs induction motor drive has also to possess a high efficiency in order to extend the running distance per battery charge. Therefore, DTC should be associated to a loss-minimization strategy so as to maximize the drive efficiency. In this paper DTC control scheme along with a loss minimization strategy is implemented.[7]

DIRECT TORQUE CONTROL

In DTC the electromagnetic torque and stator flux linkage of the machine are controlled directly by the selection of optimum inverter switching modes. The use of a switching table for voltage vector selection provides quick response and it has a simple control structure. The flux and torque errors are restricted within respective flux and torque hysteresis bands with the optimum selection being made. The DTC control scheme utilizes hysteresis controllers for torque and flux to select the switching voltage vector. These hysteresis controllers maintain the flux and torque within an allowed upper and lower limit. [4] The generic Direct Torque Control scheme for an inverter fed induction motor drive is as shown in Fig. 1. The DTC scheme comprises of flux and torque estimator, hysteresis controllers for torque and flux and a switching table.

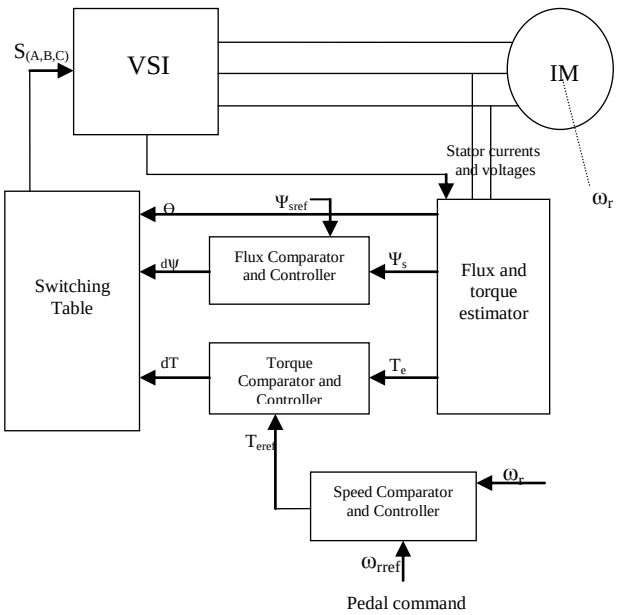

Fig.1.Basic DTC Scheme

A. Stator Flux and Torque Control

The induction motor stator flux Ψ_s can be estimated as follows

$$\psi_s = (V_s - R_s I_s)dt + \psi_{so} \quad (1)$$

where Vs is the stator voltage ,I_s the stator current, R_s the stator resistance, Ψ_{so} the initial flux vector . Selection of appropriate voltage vector in the inverter is based on stator equation by (2)

$$\Delta\psi_s = \psi_s - \psi_{so} = \int_o^t (V_s - R_s I_s)dt = V_s \Delta t \quad (2)$$

Hence, variation of stator flux space vector can be achieved by the application of stator voltage Vs for a time interval of Δt.

$$\psi_s^2 = \psi_{ds}^2 + \psi_{qs}^2 \quad (3)$$

The electromagnetic torque is estimated using (4)

$$T_e = \frac{3}{2}\frac{p}{2}(\psi_{ds} i_{qs} - \psi_{qs} i_{ds})$$

Where p indicates the pole pair , ψ_{ds} and ψ_{qs} are the stator flux in stationary d q frame ,i_{ds} and i_{qs} , d and q axis stator currents respectively.

B. Voltage Source Inverter and Switching Table

The torque control of the inverter fed machine is performed by hysteresis control of magnitude of stator flux and torque which selects one of the six active and two zero inverter voltage vectors Vs(i), as shown in Fig.2.This selection is made in order to maintain the torque and flux error inside the specified hysteresis band. The errors are indicated by *dT* and *dψ* respectively.

$$dT = T_{eref} - T_e \quad (5)$$

$$d\psi = \psi_{sref} - \psi_s \quad (6)$$

The flux loop controller is a two-level comparator and the torque comparator is a three- level comparator. The digitized outputs of the torque controller are defined as

$$\begin{aligned} H_T &= 1 & dT &> +HB_T \\ H_T &= 0 & -HB_T &< dT < HB_T \\ H_T &= -1 & dT &< -HB_T \end{aligned} \quad (7)$$

and those of flux controller are

$$\begin{aligned} H_\psi &= 1 & d\psi &> +HB_\psi \\ H_\psi &= 0 & d\psi &< -HB_\psi \end{aligned} \quad (8)$$

The total hysteresis band width of the flux loop controller is $2HB_\psi$ and of the torque controller is $2HB_T$. The actual stator flux is constrained within this band and it tracks the command flux in zigzag path, Fig.3.The feedback flux and torque are calculated from the machine terminal voltages and currents. The sector number in which the flux vector currently lies is computed by the signal computation block. There are six active voltage vectors each spanning 60 degrees. The voltage vector table receives H_ψ, H_T and sector Si and generates appropriate control for the inverter from a look-up table as in TABLE I.

TABLE I
SWITCHING TABLE FOR DTC TECHNIQUE

dψ	dT	S(1)	S(2)	S(3)	S(4)	S(5)	S(6)
1	1	V_2	V_3	V_4	V_5	V_6	V_1
	0	V_7	V_0	V_7	V_0	V_7	V_0
	-1	V_6	V_1	V_2	V_3	V_4	V_5
0	1	V_3	V_4	V_5	V_6	V_1	V_2
	0	V_0	V_7	V_0	V_7	V_0	V_7
	-1	V_5	V_6	V_1	V_2	V_3	V_4

The stator input voltages are evaluated in order to determine the stator voltage vector. Having the control strategy (switching pattern), the stator voltage vector can be directly calculated as follows:

(9)

$$v_s = \sqrt{\frac{2}{3}} V \left(S_a + S_b e^{j2\pi/3} + S_c e^{-j2\pi/3}\right)$$

where *V* is the supply voltage of the inverter (EV battery), and S_a , S_b, S_c are numbers 0 or 1 that are the output of the switching table.

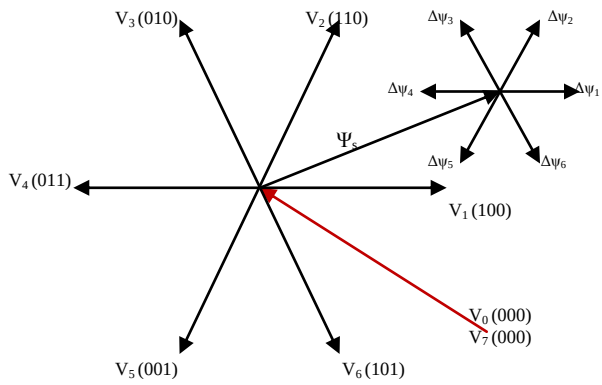

Fig.2. Inverter Voltage Vectors and corresponding stator flux variation in time Δt

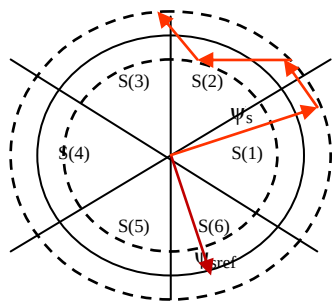

Fig.3.Trajectory of Stator Flux Vectors

INDUCTION MOTOR LOSSES MODEL

Choosing the flux level in the induction motor remains an open problem from the perspective of maximizing motor efficiency. Many operation schemes have been proposed by researchers concerning the optimal choice of excitation current or flux level for a given operating point .One among these technique is the loss-model-based approach which consists of computing losses by using the machine model and selecting a flux level that minimizes these losses. It is observed that the motor loss in steady state consists of the following components:

$$P_s = R_s(i_{sd}^2 + i_{sq}^2) \quad (10)$$

$$P_r = R_r\left(i_{sq} - \frac{\omega_s L_m}{R_{fs}} i_{sd}\right)^2 \quad (11)$$

$$P_{fe} = (\omega_s L_m)^2 \frac{i_{sd}^2}{R_{fs}} \quad (12)$$

Where P_S is the stator copper loss, P_r the rotor copper loss, P_{fe} the core loss and ω_s is the stator angular velocity.

The minimum loss is found by differentiating the total losses with respect to the current ratio and the motor losses are

found to be minimal when the loss depending on the current direct with the rotor flux is equal to the loss depending on the current in quadrature to the rotor. [5][6] The proposed loss minimization DTC scheme for EV propulsion is shown by Fig.4.

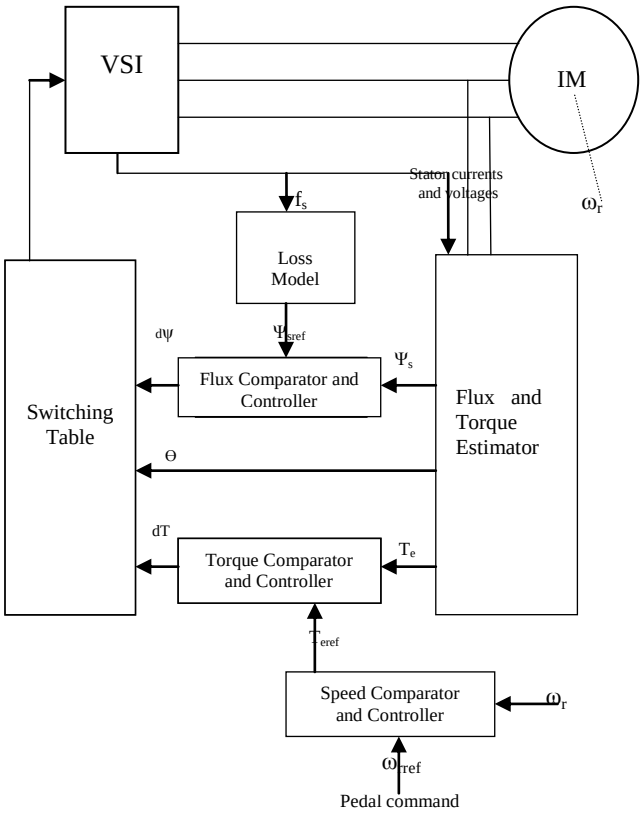

Fig.4.DTC scheme with model based control

RESULTS AND DISCUSSIONS

The optimized DTC control scheme has been simulated in MATLAB along with Simulink toolbox. The simulation is carried out for following conditions.

A. Transient Response of Vehicle Motor During Starting, Acceleration and Deceleration (Regenerative Braking)

Fig. 5. shows that the motor drawn inrush current during starting (zero to 150 rpm) of the motor. This current can be reduced by first establishing the flux with zero speed command for the first few cycles and then giving the speed command to the drive. The motor is accelerated from (150 rpm to 500 rpm at 1.1 second) with in current/ torque limit and one can observe the variation of the frequency of the currents as the drive accelerates. Then the motor is decelerated to 150 rpm at 2.5 second to show the drive behavior during regenerative braking (reversal of phase current). When the motor is slowed down, that means negative torque is applied to the electric vehicle, it behaves as a generator that produces electrical power to recharge the battery. Motor currents are at maximum during acceleration and deceleration.Fig.6 shows the torque, current variations when the vehicle is accelerated above it base speed(field weakening).

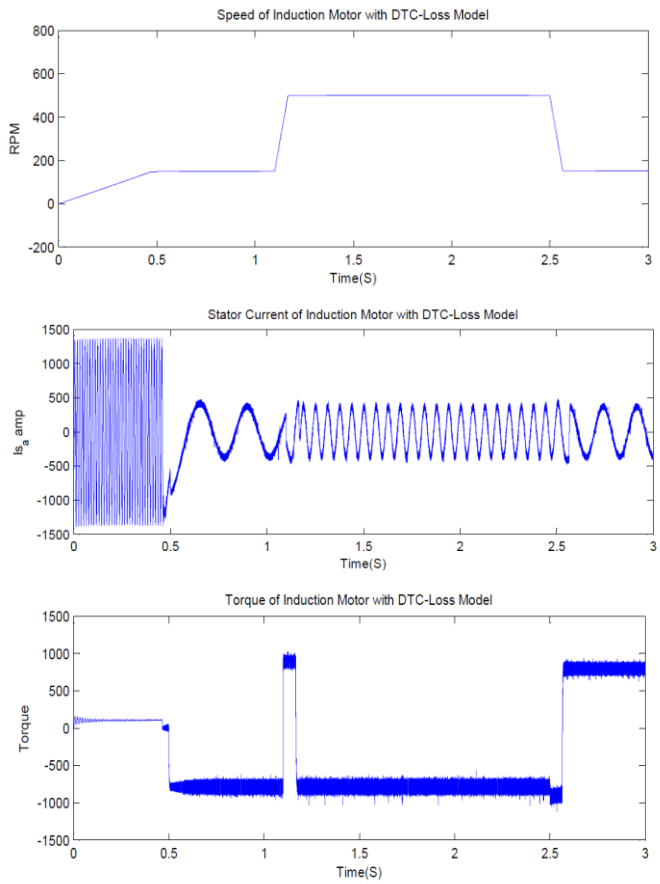

Fig.5.Transient response of the vehicle motor during starting, acceleration and deceleration

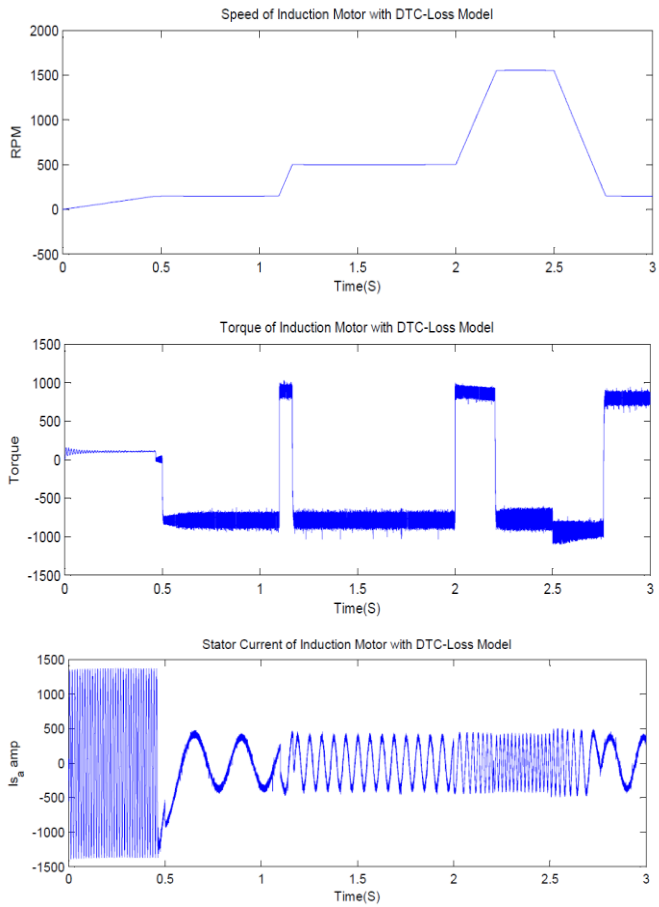

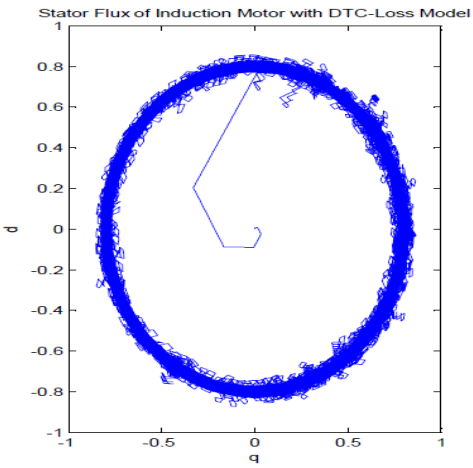

Fig.5.Transient response of the vehicle motor during starting, acceleration (above rated speed) and deceleration

CONCLUSIONS

The DTC technique has been employed for the speed control of an induction motor, above and below the rated speed. The input of the control system is the speed reference provided by the pedal of the EV. The required measurements are currents of two phases of the motor. The value of the battery voltage and instantaneous values of the control signals can be used in the place of the measured voltages. Hysteresis controllers were used to control torque and flux independently. Use of the optimum flux during the steady-state operation of the motor can reduce the amplitude of the current and flux and improve the efficiency. The proposed speed scheme is capable of providing acceleration, braking and above rated speed (Flux weakening) feature of the electric vehicle drive.

APPENDIX

Induction Machine Parameters

2 HP, 50 Hz, 4 pole

R_s=14.85mΩ, R_r=9.295mΩ,L_s=L_r=0.3027mH,

L_m=10.46mH, J=3.1kgm^2.

REFERENCES

[1] C.C. Chan, "The state of the art of electric and hybrid vehicles," *Proceedings of the IEEE*, vol. 90, n°2, pp. 247-275, February 2002.

[2] G.S. Buja et al., "Direct torque control of PWM inverter-fed ac motors—A survey," *IEEE Trans. Industrial Electronics*, vol. 51, n°4, pp 744-757, August 2004.

[3] C. Lascu et al., "A sensorless hybrid DTC drive for high-volume low-cost applications," *IEEE Trans. Industrial Electronics*, vol. 51, n°5, pp 1048-1055, October 2004.

[4] J. Faiz et al., "Sensorless direct torque control of induction motors used in electric vehicle," *IEEE Trans. Energy Conversion*, vol. 18, n°1, pp. 1-10, March 2003

[5] S. Lim et al., "Loss-minimising control scheme for induction motor," *IEE Proc.-Electr. Power Appl.*, vol. 151, n°4, pp. 385-397, July 2004.

[6] F. Abrahamsen et al., "Efficiency-optimized control of medium-size induction motor drives," *IEEE Trans. Industry Applications*, vol. 37, n°6, pp 1761-1767, November-December 2001

[7] Bhim Singh et al., "Speed Sensorless Electric Vehicle Propulsion System Using DTC IM Drive," *Proceedings of India Int Conf Power Elec*, 2006