Designing of All Terrain Vehicle (ATV)

Deep Shrivastava

Mechanical Department of Oriental Institute of Science and Technology Bhopal

Abstract- Designing purpose of this Quad bike is to manufacture an off road vehicle that could help in transportation in hilly areas, farming field and as a reliable experience for a weekend enthusiast. In order to accomplish this task, different design aspects of a Quad Bike. vehicle were analyzed, and certain elements of the bike were chosen for specific focus. There are many facets to an off-road vehicle, such as the chassis, suspension, steering, drive-train, and braking, all of which require thorough design concentration. The points of the car I decided to specifically focus on were the chassis, drive-train, and suspension. The most time and effort went into designing and implementing these components of the vehicle because it was felt that they most dramatically effect the off-road driving experience. During the entire design process, consumer interest through innovative, inexpensive, and effective methods was always the primary goal.

I. Introduction

Frame Design -

OBJECTIVE -

The chassis is the component in charge of supporting all other vehicle's subsystems with the plus of taking care of the driver safety at all time. The chassis design need to be prepared for impacts created in any certain crash or rollover. It must be strong and durable taking always in account the weight distribution for a better performance.

MATERIAL	1018 STEEL	4130 STEEL	4130 STEEL
OUTSIDE DIAMETER	2.540 cm	2.540 cm	3.175 cm
WALL THICKNESS	0.304 cm	0.304 cm	0.165 cm
BENDING STIFFNESS	3791.1 Nm^2	3791.1 Nm^2	3635.1 Nm^2
BENDING STRENGTH	391.3 Nm	467.4 Nm	487 Nm
WEIGHT PER METER	1.686 kg	1.686 kg	1.229 kg

4130 Chrome Moly Steel is the best suitable material so following it we selected it over 1018 Steel because 4130 Steel has a greater strength to weight ratio. Along with material selection, tube diameter was also taken into consideration. Different sizes of tube were considered for the frame. It was decided to create the Roll Cage using 1 inch OD and 3mm wall thickness, 4130 Steel tubing as it was thought to be more structurally sound than a larger diameter tube.

Frame Design Considerations:

CONSIDERATIONS	PRIORITY	REASON
Light-Weight	Essential	A light race car is a fast race car
Durable	Essential	Must not deform during rugged Driving
Meet Requirements	Essential	Must meet requirements to Compete
Simple Frame	High	Majority of frame fabrication done in House
Attractive Design	Desired	Easier to sell an aesthetically pleasing vehicle
Cost	Low	Car needs to be within budget

In the roll cage fabrication also we have not deviated from the initially proposed design according to CAD MODEL.

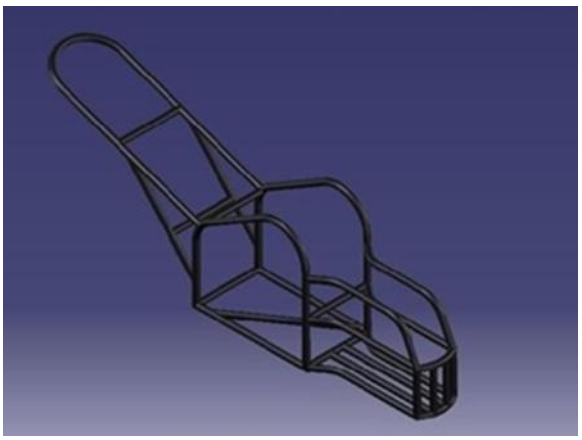

ROLL CAGE 3D CADMODEL (CATIAV5R20)

ROLL CAGE (FABRICATED)

ROLL CAGE DESIGN SPECIFICATIONS:

Type	**Space Frame**
Material	Normalized AISI 4130 Chrome-Moly. Steel
Mass of Roll cage	21.61 kg
Length of Roll cage	64.14 inches
Width of Roll cage	10.5 inches
Height of Roll cage	22.29 inches
Total length of pipes	13.04 m
Weld joints	42
No. of Bends	15
Cross section	Outer Diameter - 25.4 mm Thickness - 3mm

Finite Element Analysis (FEA) :

Finite element is a method for the approximate solution of partial differential equations that model physical problems such as: Solution of elasticity problems , Determine displacement, stress and strain fields. Static, transient dynamic, steady state dynamic, i.e. subject to sinusoidal loading, modes and frequencies of vibration, modes and loads of buckling. Roll cage analyzed at much higher forces than in real case scenario.

Loading Analysis –

To properly approximate the loading that the vehicle will see an analysis of the impact loading seen in various types of accident was required. To properly model the impact forces, the deceleration of the after impact needs to be found. To approximate the worst case scenario that the vehicle will see, research into the forces the human body can endure was completed. It was found that human body will pass out at loads much higher than 7g. And the Crash pulse scenario standard set by industries is 0.15 to 0.3sec. We considered this to be around 2.5 sec. It is assumed that worst case collision will be seen when the vehicle runs into stationary object.

FEA of Roll cage- A geometric model of the roll cage was constructed in CATIA and was imported into ANSYS Mechanical in IGES format. ANSYS was used to create a finite element formulation of the problem for both static structural analysis & Dynamic analysis. The Elastic Straight PIPE 16 element was used for creating frames and automatic fine meshing is done for the entire roll cage, with real constant as the thickness & diameter of the pipes.

For AISI 4130 alloy steel-
Young's modulus-205 GPa
Poisson's ratio- 0.27-0.29 (say0.28)
For all the analysis the weight of the vehicle is taken to be 272 kgs.

Objectives of FEA of Roll Cage-

1) To have adequate factor of safety even in worst case scenarios to ensure driver safety.

2) To have greater torsional stiffness to ensure lesse deflection under dynamic loading and enhanced performance.

3) To ensure that the natural frequency of the roll cages doesnot matches. with the engine working range frequency to avoid resonance.

Static Analysis:-
1)Frontal Impact
2) Rear Impact
3)Side Impact
4)Roll over test
5)One wheel bump test
6)Torsional Rigidity analysis
7)Heave analysis

Frontal Impact Analysis – The mass of the vehicle is 272kg. The impact test or crash test is performed assuming the vehicle hits the static rigid wall at top speed of 60 Kmph. The collision is assumed to be perfectly plastic i.e, vehicle comes to rest after collision.

Frontal Impact	6G (15303.6 N)
Max. Deformation	2.43 mm
Max. Stress	150.331 Mpa
Factor of Safety	3.05 (> 2 Design is Safe)

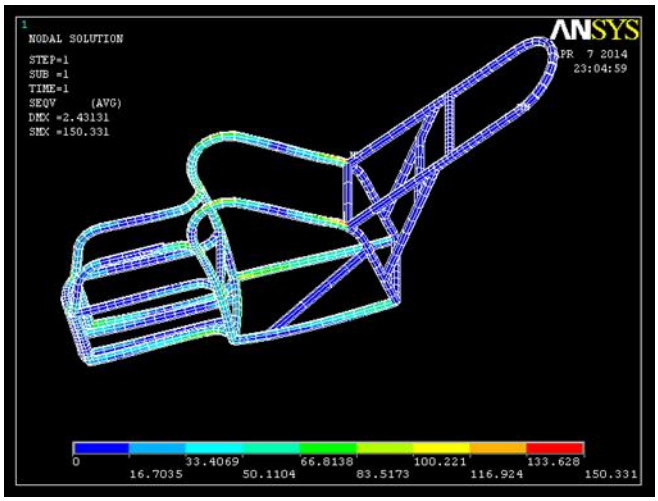

Side Impact Analysis -

Side Impact	3G (7651.8 N)
Max.Deformation	2.95 mm
Max. Stress	206.196 Mpa
Factor of Safety	2.23 (>2 Design is Safe)

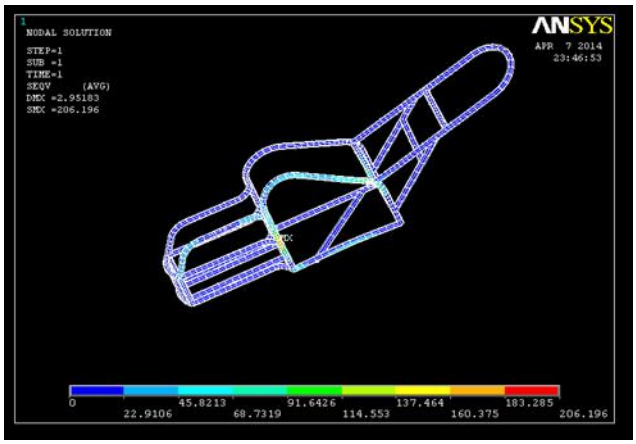

Rear Impact Analysis –

Rear Impact	3G (7651.8 N)
Max. Deformation	0.62 mm
Max . Stress	53.962 Mpa
Factor of Safety	8.52 (>2 Design is Safe)

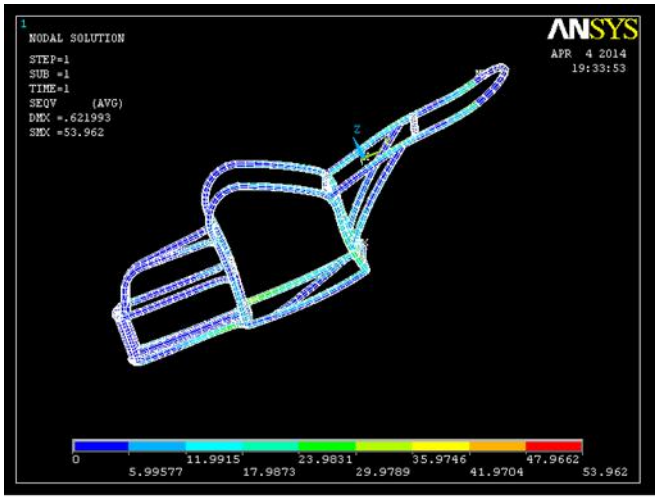

Roll Over Impact Analysis –

Roll over Impact	3.5G (8927.1 N)
Max. Deformation	0.46 mm
Max. stress	80.63 Mpa
Factor of safety	5.70 (> Design is Safe)

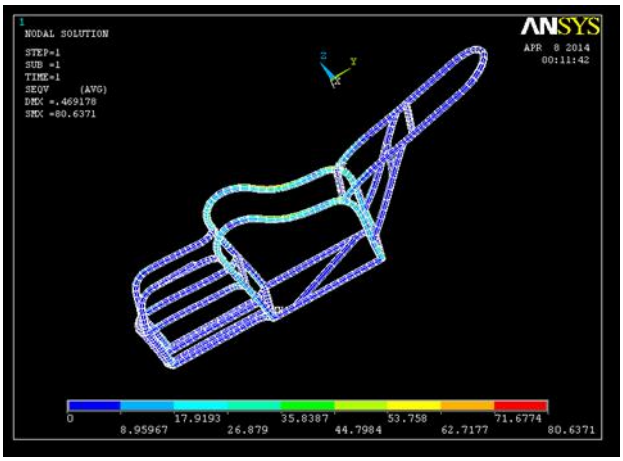

<u>Details Of Subsystem :</u>

- **<u>Suspension Design -</u>**

<u>OBJECTIVE -</u>

1. Designing a suspension which will influence significantly on comfort, safety and maneuverability.
2. Contributing to vehicles road holding/handling and braking for good active safety and driving pleasure.
3. Protect the vehicle from damage and wear from force of impact with obstacles (including landing after jumping)
4. Maintaining correct wheel alignment.

DESIGN METHODOLOGY -

The overall purpose of a suspension system is to absorb impacts from coarse irregularities such as bumps and distribute

that force with least amount of discomfort to the driver. We completed this objective by doing extensive research on the front and rear suspension arm's geometry to help reduce as much body roll as possible. Proper camber and caster angles were provided to the front wheels. The shocks will be set to provide the proper dampening and spring coefficients to provide a smooth and well performing ride.

WHEEL GEOMETRY	
Camber Angle	2^0
Caster Angle	4^0
Toe-in	3 mm
KPI	7^0
Ride Height	6.75 inches
Scrub radius	128 mm

DESIGN CONSIDERATIONS	
Unsprung mass of vehicle	52.1kg
Static Stability Factor (Front)	1.10
Static Stability Factor (Rear)	1.03

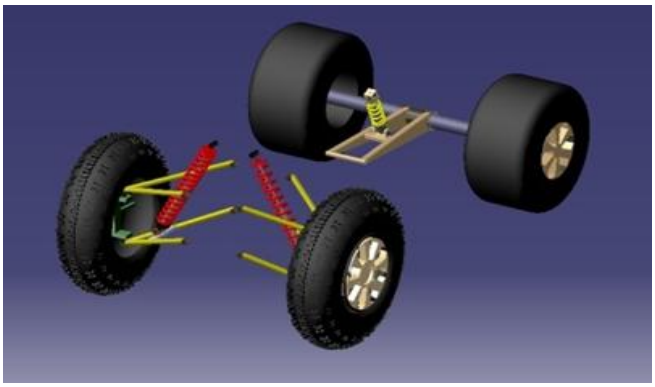

FRONT SUSPENSION CAD MODEL (CATIAV5R20)

FRONT SUSPENSION VIEW

FRONT SUSPENSION :

1. For our front suspension we chose one with a Double arm wishbone type suspension. It provided specious mounting position, load bearing capacity besides better camber recovery.
2. Front Unequal Non Parallel double wishbone suspension .
3. The tire need to gain negative camber in a rolling situation, keeping the tire flat on the ground .

REAR SUSPENSION :

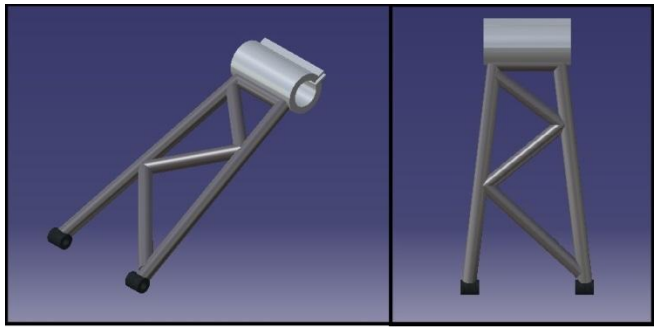

SWING ARM CAD MODEL (CATIAV5R20)

FABRICATED SWING ARM

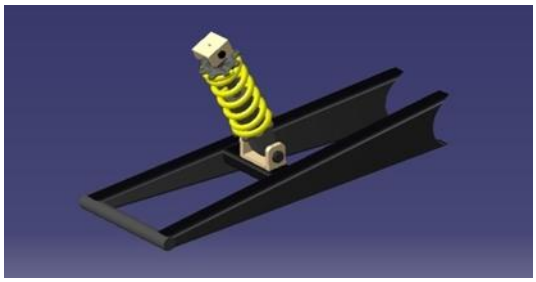

MONOSHOCK MOUNTING ON SWING ARM

For our Rear suspension we chose Swinging Arm with Monoshock type suspension. Using monoshock over dual shocks is advantageous due to ease of adjustment as there is only single damping unit and smaller unsprung mass.

WISHBONE ARMS :

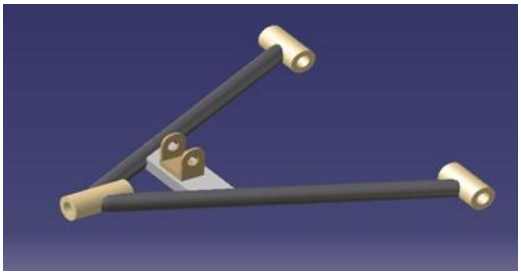

Design for optimal geometry of the control arms is done to both support the race-weight of the vehicle as well as to provide optimal performance. Design of the control arms also includes maximum adjustability in order to tune the suspension for a given task at hand. The front A-arms are constructed of 3mm wall thickness, 1 inch diameter 4130 round Chrome moly tube. FEA was also performed on the front arms, and proved them to be capable of handling the stresses exerted on them in extreme situations. Also kinematic analysis on the control arms was done as shown in the figure below to determine the dimensions of cross-section of control arms.

FEM OF WISHBONE ARM (A-ARM) :

Finite element analysis has also been conducted on the front arms. The stresses created in the part can be seen in Figure. The biggest reason for choosing this design is that it only requires one piece, using a simple jig, to be fabricated. It has been determined that the tubing used for the suspension arms will be ASTM 106a steel. It will be 1" diameter with 3" wall thickness. This was determined after comparing the weight and material properties for several sizes of tubings.

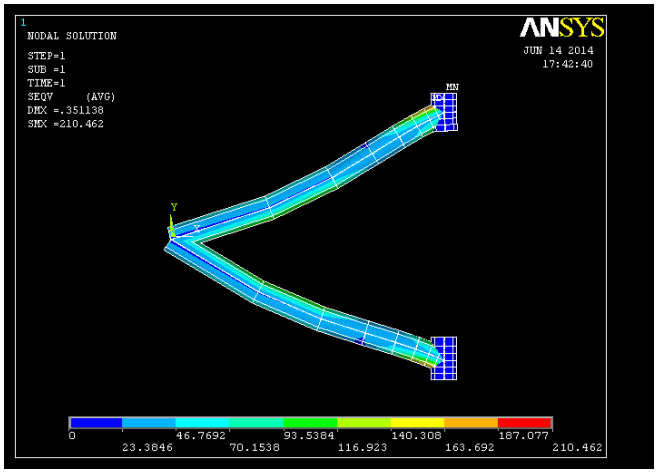

Determination of length of wishbone arms:-

The length of the wishbone is found virtually in CATIA V5R20. As we know the pivot points of wishbones as well as the ball joint points on the knuckle.

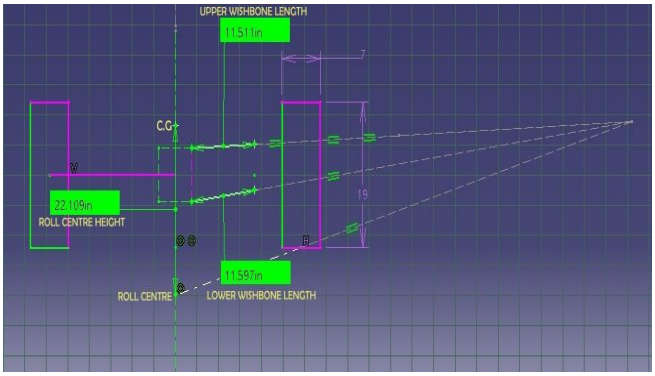

Roll Centre Height:-

The roll centre height was found in CATIA V5R20 by extending the wishbone arm axis to its instantaneous centre and then from the instantaneous centre a line is drawn through the tire centre on the ground which intersect the vehicle centre line, this point is called roll centre and distance of this point from the C.G is the roll centre height.

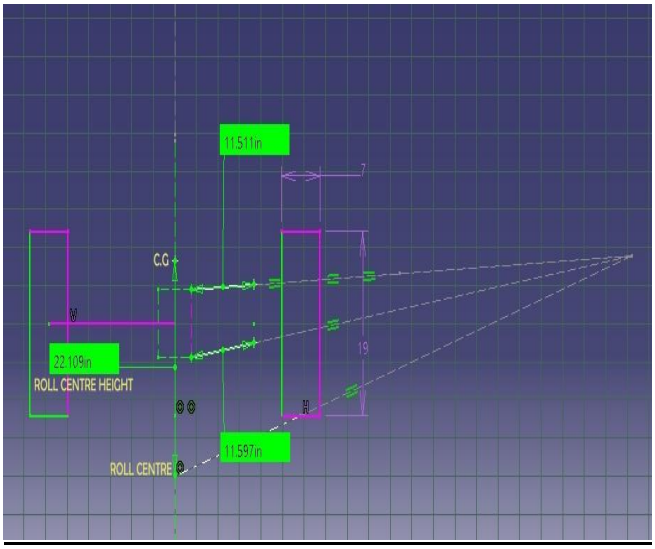

SHOCK ABSORBERS :

The front suspension is equipped with Piaggio shock absorbers which allows the automatic preload adjustment in order to keep the optimal vehicle trim. The Piaggio shock absorbers is completely self-adopting so no HMI is needed. The Rear suspension is equipped with Honda Unicorn MONOSHOCK OEM Shock aborber as it provide the the necessary stiffness needed by the swinging arm to maintain the ground contact as well as it is simpler in design, less unsprung weight which helps to reduce the overall weight of the quad bike and thus provide faster acceleration.

Calculations –

Initial data for Shock Absorber:

FACTORS	SPRING INDEX	WIRE DIAMETER (mm)	SPRING OD (mm)	NO. OF TURNS	FREE LENGTH OF SPRING (mm)

FRONT	7.0	12.7	88.9	15	330.8
REAR	4.512	15.8	71.3	10	254.6

Stiffness of the spring (K) = G x d^4 / 8 D^3 n
Where,
G = Modulus of rigidity = 70 Gpa
d = Wire diameter in mm
D = Spring outer Diameter in mm
n = No. of Turns
Spring Force (Fs) = K x X
Where, X = Spring Travel
Spring Index (C) = D/d
Motion Ratio (MR) = Spring Travel / Wheel Travel
Static Stability Factor = Wheel Track / 2 x Hcg

Final Result:

FACT-ORS	SPRING RATE (kg/cm)	ROLL CENTER HEIGHT (INCH) [FROM DATUM]	MOTI-ON RATIO	INCLINATION
FRONT	22.01	22.109 inch	0.73	66.9^0
REAR	383.38	0	0.25	62^0

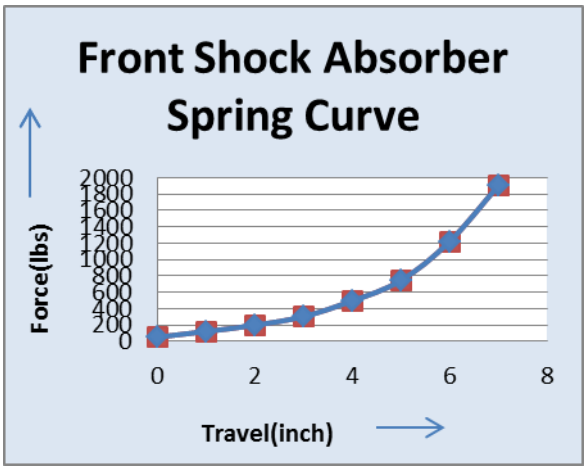

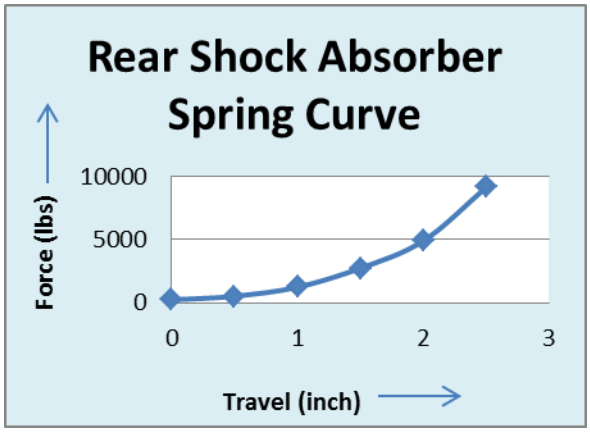

KNUCKLE (CUSTOMISED) FEM :

The knuckle was evaluated using the ANSYS 14.0 finite element program. The total weight of the system was estimated to be around 2746 N (280 kg * 9.81 m/s*s). In a previous study, it was determined that the maximum acceleration a off-road vehicle is likely to endure during competition is 3g's. With this knowledge, 8240.4 N forces were distributed on each component in various directions in order to simulate the stresses encountered during landing from a jump, lateral acceleration due to turning, and frontal impact. The knuckle was tested in order to identify any concentrated stresses in the design. Fixed geometry constraints were added to the ball joint holes at the top and bottom of the knuckle in order to prevent the part from moving when forces are applied. The knuckle was first loaded with a simple vertical force through the spindle similar to the vehicle landing from a jump. The resulting **Von-mises stress** plot is shown in Figure below:

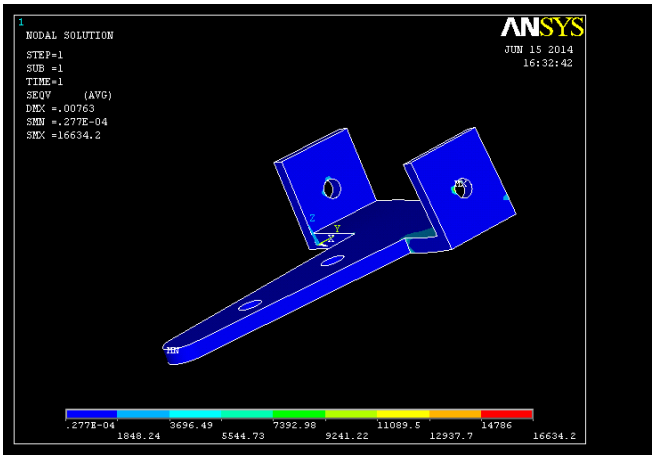

Max. Stress	166.34 N/mm2
Ultimate strength of mild steel	450 N/mm2
Factor of safety	450/166.342 = 2.705 Hence the design is SAFE.

FEM FOR MAX. DEFORMATION:

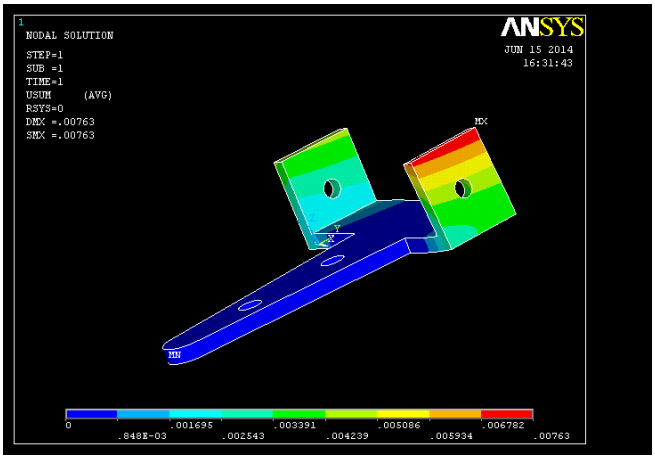

MAX. DEFORMATION - 0.763 mm
Hence, it is very less so the design is SAFE.

- **Steering Design-**

Objective –

The objective of steering system is to provide max directional control of the vehicle and provide easy maneuverability of the vehicle in all type of terrains with appreciable safety and minimum effort. Typical target for a quad vehicle designer is to try and achieve the least turning radius so that the given feature aids while maneuvering in narrow tracks, also important for such a vehicle for driver's effort is minimum. This is achieved by selecting a proper steering system (Centrepoint Steering 1:1). The next factor to take into consideration deals with the response from the road. The response from the road must be optimum such that the driver gets a suitable feel of the road but at the same time the handling is not affected due to bumps. Lastly the effect of steering system parameters on other system like the suspension system should not be adverse.

Design –

We researched and compared multiple steering systems. We need a steering system that would be easy to maintain, provide easy operation, excellent feedback, cost efficient and compatible to drivers ergonomics.

Thus we have selected 4 bar linkage centralised point steering system for our Quad bike.

We have increased our front and rear track width to improve the lateral stability according to offroad conditions. Rear track width is kept slightly less than front track width to create a slight over steer in tight cornering situation which allows easier maneuverability at high speed.

$$Lateral\ Weight\ Transfer\ (LWT) = \frac{\text{Lateral Acceleration} \times \text{Weight} \times \text{Hcg}}{\text{g} \times \text{Track width}}$$

OLD:-

$$Lateral\ Weight\ Transfer\ (LWT) = \frac{7.41 \times 260 \times 0.406}{9.81 \times 0.838}$$

OLD LWT= 95.14 Kg

NEW:-

$$Lateral\ Weight\ Transfer\ (LWT) = \frac{7.41 \times 280 \times 0.406}{9.81 \times 1.2192}$$

NEW LWT= 70.34 Kg

$$\%\ reduction\ in\ lateral\ weight\ transfer = \frac{95.14 - 70.34}{95.14} \times 100$$

$\%\ \boldsymbol{reduction\ in\ LWT}$ **=26 %**

Calculations -

We have done following calculations on our steering system:

Initial Data –

Wheelbase(L)	47"=1.193m
Front Wheel Track	46"=1.168m
Rear Track Width	44"=1.117m
Weight Distribution	45:55
Total Weight	280 kg
Turning Radius	2.5m
Static Weight on Front Wheel	126 kg
Static Weight on Rear Wheel	154 kg

$$\% \ Ackermann \ Geometry = \frac{\text{Angle of Inside Wheel} - \text{Angle of Outside Wheel}}{\text{Angle of Outside Wheel for 200\% Ackermann}}$$
= 82.56 %

Slip Angle: $\tan\theta = \frac{P}{B}$

For front Wheels, $\theta = 17.65$

For Rear Wheels, θ=23.5

Acceleration of vehicle:

$$\propto = \frac{v^2}{g \times R} = 11.705 \ m/s^2$$

Cornering Stiffness:

$$C.S = \frac{Lateral \ force \ on \ each \ wheel}{Slip \ Angle}$$

For front, C.S=35.23 N/degree

For Rear, C.S=29.96 N/degree

Under Steer Gradient(K):

$$K = \frac{Weight \ on \ front \ tyre}{C.S(front)} - \frac{Weight \ on \ Rear \ tyre}{C.S(Rear)}$$

K= − 0.79 (-ve sign indicates the tendency to over steer)

Critical Speed(V_c)=29.13 m/s = 104.86 kmph

Description	**Manually Assisted (Centralized)**
Steering Box	Centralized Steering System (4 Bar linkage mechanism)
Lock to Lock Turns	0.30 Turns
Outside Wheel Turning Angle	22.45
Inside Wheel Turning Angle	30.90
Steering Ratio	1:1
% Ackermann Geometry	82.56%
Turning radius	2.5m
Ackermann Angle	10.21
Under Steer Gradient	-0.79

Steering Mechanism –

To achieve the correct steering, two types of mechanisms are used. They are the Davis & Ackermann mechanism, Ackermann Mechanism is used generally for application are low. This type of geometry is apt for all-terrain vehicle like Our Quad where the speed seldom exceeds 60 kmph because of the terrain. This geometry ensures that all the wheels roll freely without the slip angles as the wheels are steered to track a common turn centre

Steering Arm Angle:-

The angle which the steering arm makes with the centre line can be found out geometrically by drawing the given diagram in CATIA or by practical measurement.

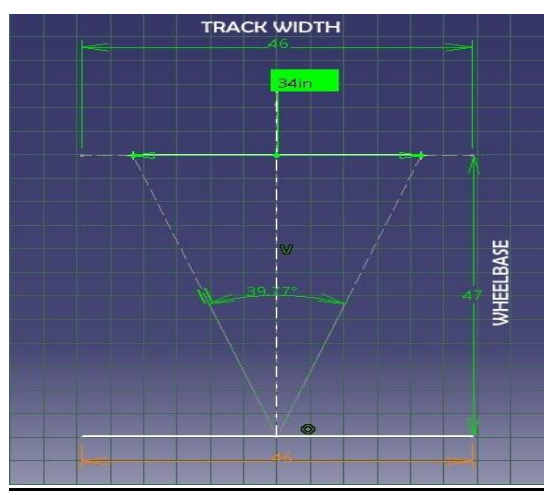

Turning Radius –

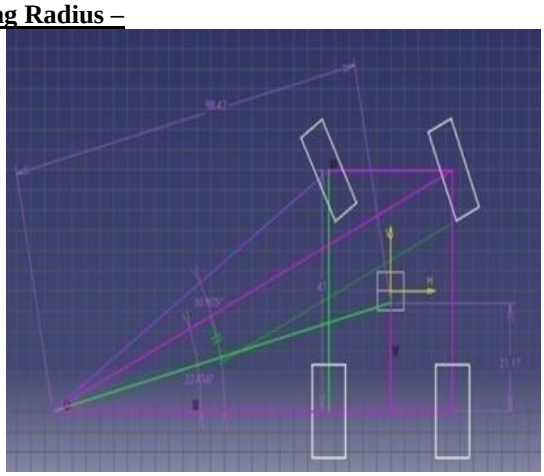

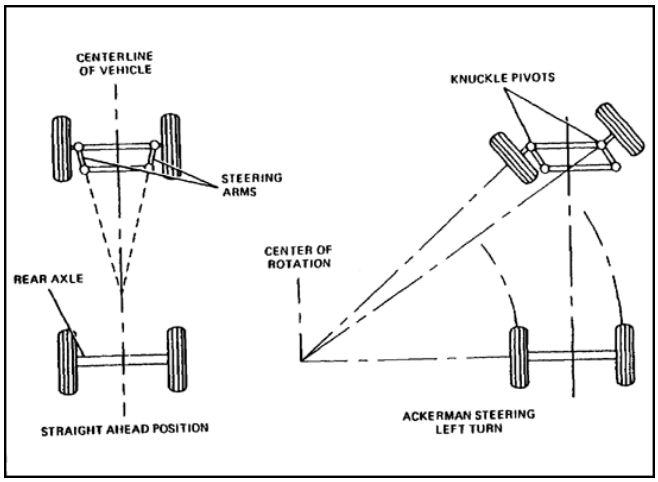

ANALYSIS OF TIE ROD :

As that of theoretical study of tie rod is done. The overall purpose if tie – rod is to transmit the motion from steering arm to steering knuckle and sustain the forced vibrations caused by bumps from tires due to uneven road surfaces the main task is to find the deformation and stresses induced in the tie rod and optimising it for various material combinations. The 3-D model is prepared for Tie-Rod of AISI 1020 material is assigned and analysis is carried out using ANSYS14.0.

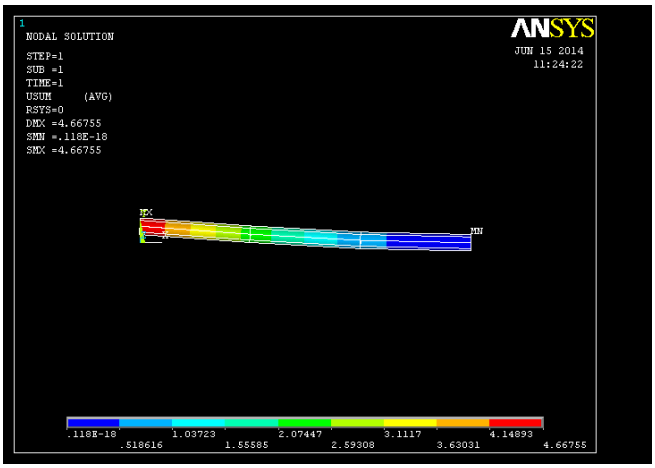

FEM OF TIE ROD FOR MAX. DEFORMATION

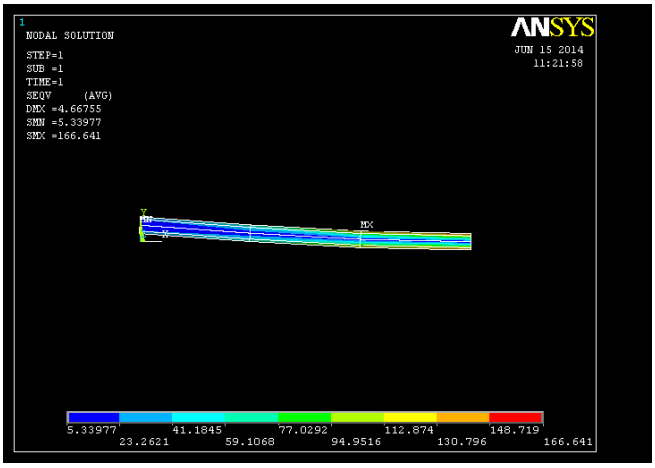

FEM OF TIE ROD FOR TIE ROD FOR MAX. STRESS

TIE ROD DETERMINATION :-

Tie rod length was found virtually in CATIA VSR20 by assuming the position of tie rod to be fixed on knuckle and extending wishbone axis to meet at the instantaneous centres and with the help of steering angle, geometrically we found tie rod length.

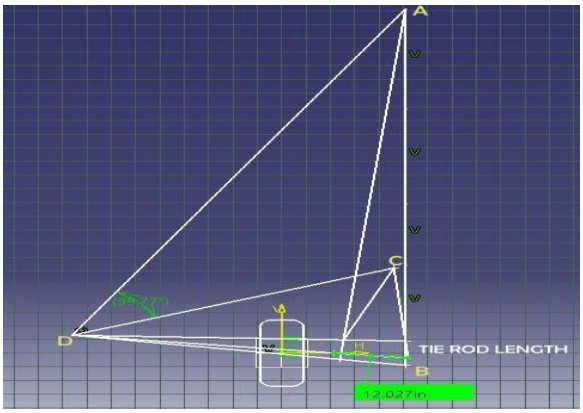

Graph :

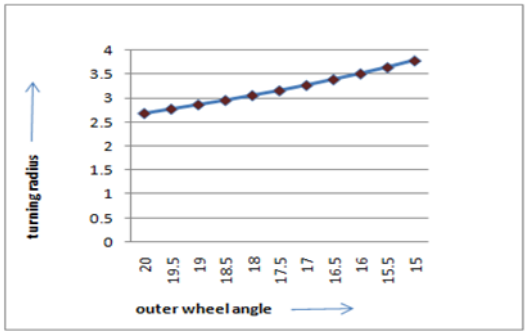

Effect of the w/l on the Ackermann condition for the front-wheel steering vehicles:-

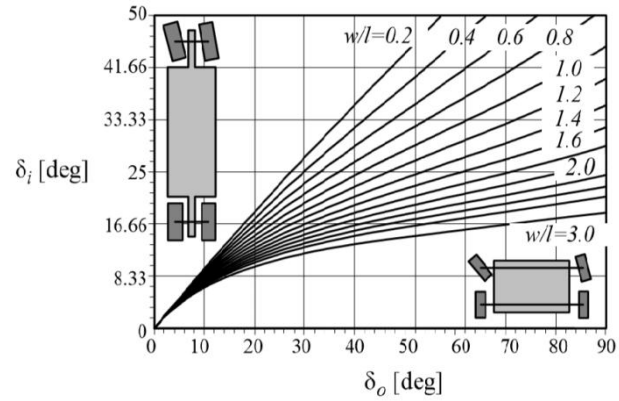

Bump and roll steer

Steer with ride travel is very common in all terrain scenarios.steer with ride travel is undesirable because if the wheel steers when it runs over a bumps or when the car rolls in a turn the car will travel on a path that a driver did not select intentionally.

Ride/Bump and roll steer are a function of the steering geometry . If the tied rod is not aimed at the instant axis of the motion of the suspension system then the steer will occur with ride because the steering and suspension are moving about different centres. If the tie rod is not of the correct length for its location then it will not continue to point at the instant axis when the suspension travelled in ride. Thus the choice of the tie rod location and length is important. If the tie rod height and angle are adjustable it is usually possible to tune most of the ride steer out of a suspension.

Curved ride/bump steer as shown in figure are to be avoided because they result in a net change in toe with ride and the steer effect changes from under steer to over steer depending on the wheel ride position. If ride steer plot is curved then a possible solution is to raise both the ends of the tie rod to move it closer to the shorter, upper A arm with the tie rod angle also be adjusted.

Braking system

Objective –

The purpose of the braking system is to increase the safety and maneuverability of the vehicle. In order to achieve maximum performance from the braking system, the brakes have been designed to lock up all four wheels at the same time. It is desired from a quad bike that it should have effective braking capability to negotiate rigid terrains.

Design –

The braking system is composed of both internal expanding drum brakes and disc brakes. The drum brakes are installed at the two front wheels and a single rotor is mounted on the rear axle to satisfy the braking requirements of our quad bike such as terrain of the track, speedlimits, driver ergonomics and other rulebook constraints.

The front drum brakes are mounted on each wheel of internal radius 2.5 inches having a brake lining width of 3 mm. The distance between the pivot point of both the brake shoes and the cam is 3.93 inches.

At the rear axle we are using disc brake due to fact that we require a effective braking at the rear. It is also to our advantage that even if the front brakes fail in the worst case scenario, braking power is still available to the driver. The Rear brake is composed of 5 inch diameter disc and dual piston 1.5 inch diameter calliper.

FEM OF BRAKE DISK (CUSTOMISED) :

The role of FEA analysis in disk brake helps us to ascertain the importance of holes in the design of disks.

TYPE of Element used : PLANE 55

Since the thickness of disk is very small (4mm) when it is compared to its diameter, hence the analysis in 2-D. for this reason, the plane element is chosen in place of solid element in case of 3-D analysis.

BOUNDARY CONDITION :

The boundary condition is that the temperature of outer edge is 40C and of the inner edge also 40C.

THERMAL LOAD :

The temperature of the contact patch is assumed to be 700C. It is assumed to be annular region.

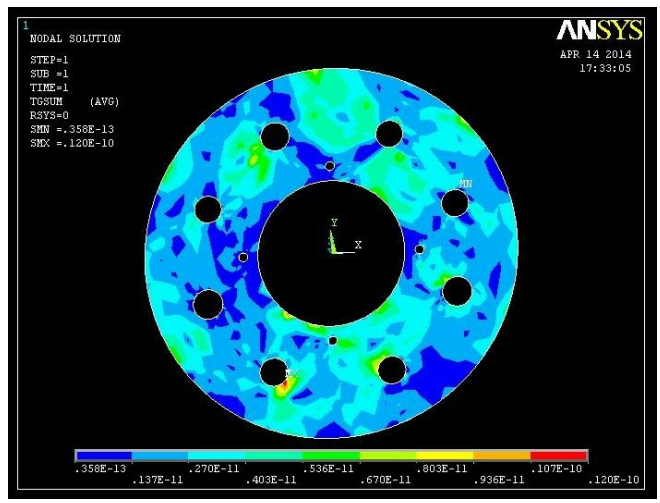

ANALYSIS OF RESULT :

By using 8 holes of 10mm diameter in the disk the temperature of the disk is reduced and more area is under reduced temperature. Hence by using holed disk the life of the disk can be improved from thermal degradation.

Calculations–

The total weight of the vehicle along with a average weight of driver (70 kg) was estimated to be 260 kg. The weight distribution for the quad bike was estimated to be approximately 45:55 from the front to the rear. The static weight distribution of the vehicle is 117 kg at the front and 143 kg at the rear.

Stopping Distance (SD) = $(V_{max})^2/2\mu g$

= $(16.66^2/2 \times 0.75 \times 9.81 = 18.72$ m

Deceleration rate $(D_x) = (V_{max})^2/2\ SD$

= $16.66^2/2 \times 18.72 = 7.36$ m/sec^2

Dynamic weight transfer $(\Delta W) = D_x x\ W\ x\ H_{c.g}/gxl$

=7.36 x 280 x 0.406 / (9.81 x 1.193) = 71.49 kg

Total Torque to drive the wheel =
$T_F + T_R$ = 1656.3x0.2413 + 403.18x0.2286
= 491.83 Nm

For Front Drum brake–

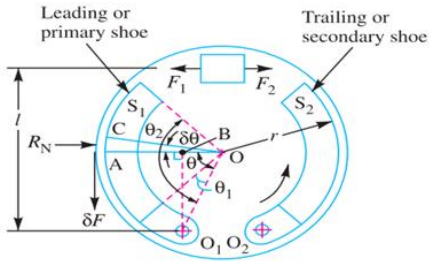

Forces on an internal expanding brake.

Initial Data-

Driver effort	25 lbs
Lever Ratio	6.3:1
Coefficient of friction ()	0.5
Internal Radius of Drum (r)	2.5 inches
Width of Brake Lining (b)	3 mm
Pivot point to cam distance (l)	3.93 inches
θ_1	30°
Θ_2	150^0

Braking Torque(T_b)
$= \mu p_1 b r^2 (\cos\theta_1 - \cos \Theta_2)$
$= 0.5 \times 16.427 \times 10^6 \times 0.003 \times (0.63)^2$
= 169.386 N-m
Braking Torque for both the wheels (T_{BF})=2 x T_b
= 2 x 169.386 = 338.772 N-m

For Rear disc brake –

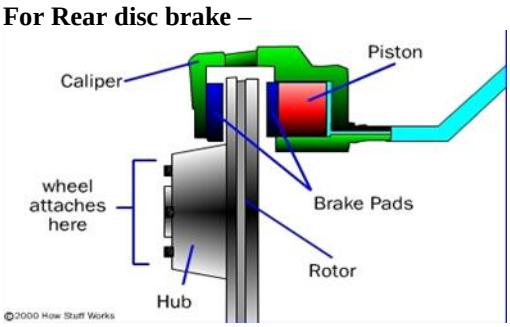

Initial data –

Drive Effort (D_E)	80 lbs
Pedal Ratio (R_P)	4.66:1
I.D of Master Cylinder (ID_{mc})	14.043 mm
I.D of Calliper (ID_c)	38.23 mm
μ between Disc Pad & Rotor	0.4
Diameter of Rotor	5 inches

Pressure developed at master cylinder(P_{mc})
$= D_E \times R_P / \pi/4 \times (ID_{mc})^2$
$= 10.09 \times 10^6$ N/m
Force of friction generated by brake pad (F_{fri}) = 2x F_{cal} x μ
= 9154.56 N

Torque at Rotor(T_r) = F_{fri} x R_{eff}
= 9154.56 x 0.0508
= 465 N-m
Torque at Rear wheels(T_{BR}) = T_r
= 465 N-m

Final Result-

Deceleration Rate	7.36 ms^{-2}
Stopping Distance	18.72 m
Stopping Time	2.25 sec
Braking Force	3437 N
Dynamic mass Transfer	71.49 kg
Braking Efficiency	75%

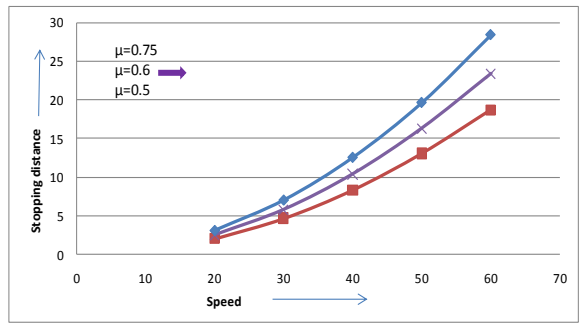

DRIVE TRAIN-DESIGN

Objective-

The drive train includes the engine, transmission and the axles for transmitting the power to the wheels. The drivetrain of a motor vehicle is the group of components that deliver power to the driving wheels. This excludes the engine or motor that generates the power. In contrast, the powertrain is considered as including both the engine or motor, and the drivetrain.

SHIFTER TRANSMISSION (MANUAL GEARBOX) –

The shifter transmission has high output and power transfer. The power is more easily controlled on with the gear shifter and desired gear can be chosen at any time. The main advantage of the shifter transmission is that it is tried and tested in many previous vehicles besides it has a high output also. Therefore we have decided to use the shifter transmission. We have studied the transmissions of various 2-wheelers and other small vehicles but none of them meets our requirements as much as the Honda CBR 250 transmission does. Therefore we have decided to use the HONDA CBR 250 transmission. Since we have to manage maximum speed at 60 kmph so we have restricted our vehicle up to 3rd gear only.

Engine Specification -

Engine	Honda CBR 250
Displacement	249.4 cc
Bore x stroke	76 mm x 55 mm
Compression Ratio	10.7:1
Power	26.2 bhp (18.7 Kw) @ 8500 rpm
Torque	22.9 N-m @ 7000 rpm

Idle Speed	1400 rpm +/- 100 rpm
Ignition	Computer controlled digital transistorized with electric advance
Fuel	Petrol
Cooling	Liquid cooled
Lubrication	Forced and wet Sump
Lube Oil	10W30 MB Oil

Calculations –

***Formulae used*:**

R_w= Radius of wheel,
R = overall gear ratio,
N = Redline rpm (8500 rpm),
η_t = Transmission efficiency (85%)
f_r = Rolling resistance constant,
T_E = Engine torque (22.9 N-m)
Vehicle speed (V) = $(2\pi\times R_w \times N\times 3600/R\times 1000)\times 0.85$
(Assuming 85% efficiency ,due to transmission losses as we have used old parts)
Tractive Effort (F) = $R\times \eta_t \times T_E / R_w$
Torque on wheel (Tw) = $R\times \eta_t \times T_E$

$$\text{Grade ability} = \left(\frac{F}{W} - F_r\right) \times 100$$

Individual and overall gear ratio –

Gear	*Gear ratio*	*Over all ratio*	*Speed of wheel(kmph)*	*Torque on wheel (N-m)*
Final drive ratio	6.619	-	-	-
First	3.333	22.061	28.15	429.417
Second	2.117	14.012	44.32	272.743
Third	1.571	10.398	59.725	202.397

Engine –Torque Curve

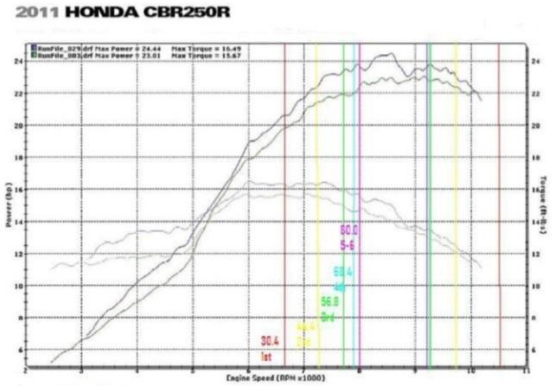

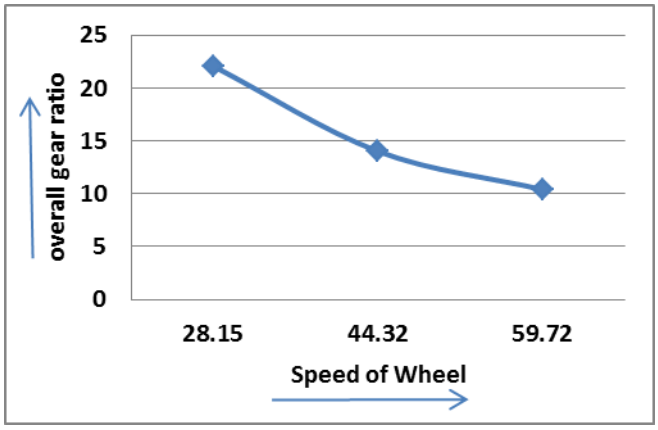

TYRES AND RIMS -

Objective -

Traction is one of the most important aspects of both steering and getting the power to the ground. The ideal tire has low weight and low internal forces. In addition, it must have strong traction on various surfaces and be capable of providing power while in puddles.

Functions-
-Supports weight
-Transmit vehicles propulsion-
-Soften impacts from roads

TYRES–

Keeping in mind all the above mentioned aspects we studied about the various types of tires available in market and decided to use 2-Ply Duro rating tyres, tubeless tires and that have got specific tread pattern so as to provide a very strong and firm grip on all kinds of surfaces as well as sturdy enough to absorb various bumps and depressions on track. After going through the engine, transmission and some basic torque and angular velocity calculations we have finalized the diameter of front tires to 19 inches and the diameter of rear tires to 18 inches which would help us to transmit maximum power. This calculation is also in accord with the requirements of Acceleration, Hill climb, Maneuverability and Endurance events. The dimension of Front tires is finalized as 19×7 inches and Rear tires 18×9.5 where diameter is 19 inches and 18 inches and width is 7 inches and 9.5 inches respectively.

RIMS -

The Rims shall be made up of Aluminum to minimize unsprung weight. By reducing the width of the rim the inertia

will be directly decreased and subsequently this will also reduce the overall weight. The diameter of all four rims will be 8 inches. To make our Design cost effective we have customised our own rims.

We selected two identical scooter rims from the scrap yard and fastened them with four 3 inch bolts which are fixed together by welding collar joint of the bolts.

Considering driver's safety and ergonomics, we have used two tubes in a tyre for worst case so that even if one tube get burst, another tube will handle the situation upto 100kms.

WHEEL END -

The wheel end is made up of the following parts - Rim, Hub, Disc/Drum, Milled bearing, and knuckle in sequence .Their compatibility with each other is a major design issue as these parts have been taken from different sources.

Wheel Specifications:

Wheel	Dimensions
Front	19×07-08
Rear	18×9.5-08

➢ **Electrical System :**

Objective -

The electronic system for the car Quad Bike was designed to fulfil two key purposes. First, the electronics system supports. The mandatory safety equipment, specifically the brake light and the kill switch circuit.

COMPONENTS OF ELECTRICAL SYSTEM

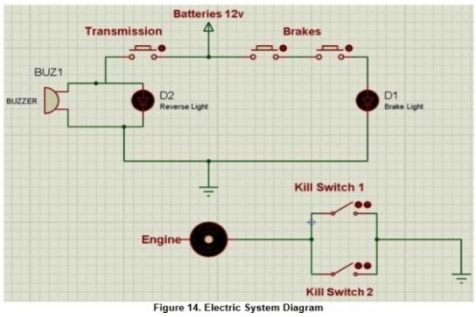

Figure 14. Electric System Diagram

1. **BATTERY -**

A maintainance free lead-acid storage battery is an electrochemical device that produces voltage and delivers electric current. The electrochemical reaction changes chemical energy into electrical energy and is basis of all automotive vehicle.

- SPECIFACTONS:-*9V 6Ah.*
- PURPOSE:- Electricity from battery is used operate lighting ,for ignition and other electrical system.

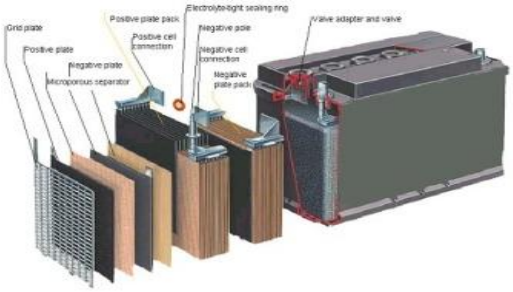

2. **Spark Plug-**

It is used to ignite the fuel inside the cylinder of petrol engine.

- SPECIFICATION:- *SIMR8A9(NGK)*

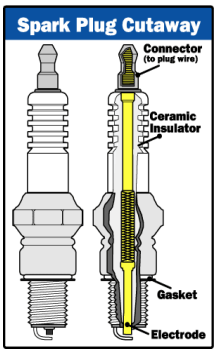

3. **Reverse Light and Alarm -**

Our vehicle (introducing reverse gear) is equipped with a reverse light (White colour, visible at a minimum distance of 10 meters from vehicle). Reverse alarm is installed for safety reason which shall operate when the reverse gear is engaged.

4. **Kill Switch -**

These kill switches are able to cut off all the electrical connections including ignition system and are rigidly mounted near the steering handle where the driver can easily control it. Second kill switch is placed on left side of vehicle near driver seat.

5. **Brake Light –**

The brake light is installed at the back of our vehicle red in colour which is clearly visible from the rear, and is visible in very bright sunlight, and is mounted between the wheel centerline to serve the purpose of indicating that the driver has applied brake and the vehicle tends to stop.

SPECIFICATIONS - *32 led brake light with brake housing*.

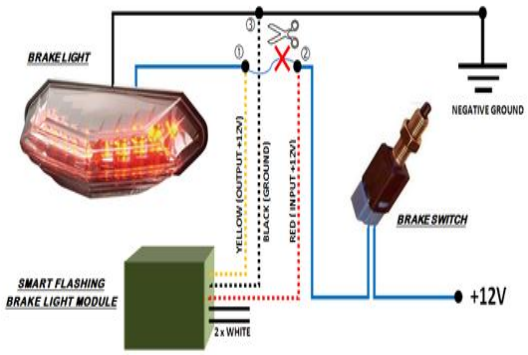

6. Electric Start –

The modern starter motor is either a permanent-magnet or a series- or series-parallel wound direct current electric motor with a solenoid switch (similar to a relay) mounted on it. When current from the starting battery is applied to the solenoid, usually through a key-operated switch, it pushes out the drive pinion on the starter driveshaft and meshes the pinion with the ring gear on the flywheel of the engine.

- **DRIVER'S SAFETY & ERGONOMICS-**

Driver's safety is the most important concern for our ATV. For better perspective we have made a 1:1 PVC model of the roll cage and further improvised our design in CATIA according to driver's ergonomics. For the comfort and well-being of the driver, the use of standard helmet, goggle, driver suit, gloves, neck brace, shoes & fire safety equipment will be used to ensure driver safety. For the rugged, up and down track the vehicle will be provided with a hitch point bumper with spring support installed in the front of the vehicle to absorb energy from collision. Two Fire extinguisher and two kill switches specified in the rulebook will also be used for the case of emergency.

Ergonomics include the foam padding of the front, rear and side body panels, gear shifting indicator, turn light indicators, standard rear view mirrors and such other things. ISI grade brake lights will be installed in the ATV with proper insulations in the vehicle which allows us to successfully compete in the Quad Torc competition.

DRIVER'S VISIBILITY TEST:-

Driver's visibility governs the safety of the vehicle. The visibility not only refers to driver's ability of neglecting a distant placed object infront of the vehicle but also the ability to distuinguish obstacles and respond to controls spontaneously.

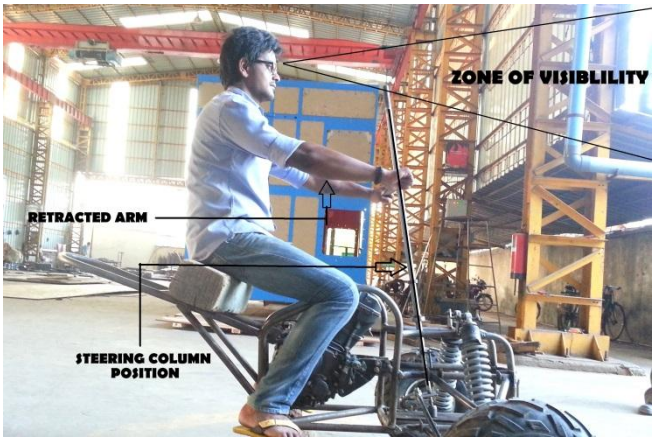

PICTURE SHOWING DRIVER ARM POSITION AND VISIBILITY ZONE (DRIVER ERGONOMICS)

Anthropomatry:-

Effective motorcycle and personal protective equipment design depends heavily upon understanding the geometric relationship between the motorcycle and the motorcycle rider. Basic human factors issues such as forward vision, riding comfort, control location and operation all require knowledge of riding posture while operating a motorcycle. This study reports on the results of a study to determine the three dimensional location and orientation of body segments for six different postures. Each subject was asked to assume a most comfortable riding position followed by a maximum forward and maximum rearward riding position on a conventional, sport and cruiser motorcycle. Many trials were conducted and these results were compared to a series of tests collected on the same motorcycles for testing. The data from this study provide unique three dimensional anthropometric data that could be used for future human factors motorcycle research.

The subjects were informed that photographs were going to be taken of them in various riding positions. The subjects were instructed that the first position represented their most natural or most comfortable riding posture for that particular motorcycle. The second trial represented the forward most riding posture that they would assume while the third trial represented the most rearward posture that they would assume for that motorcycle. Following these three trials, the subjects were asked to assume intermediate postures between these two extreme postures. In general, a minimum of five trials were collected for each subject. For all trials, subjects were asked to assume that they were operating the motorcycle and looking straight ahead. A target was placed on the curtain directly in front of the rider at some height. Riders were instructed to look forward to that they could see the target, but not necessarily to fix their gaze upon the target. It was felt that this approach ensured that the rider's head would remain upright throughout the entire range of seating positions.

TABLE- List of body dimensions selected for measurement including age and weight:-

Dimension Number	Dimension	Description
1	Age (year)	
2	Weight (kg)	Total mass (weight) of the body
3	Stature	Vertical distance from the floor to the highest point of the head (vertex).
4	Shoulder (biacromial) breadth	Distance along a straight line from acromion to acromion
5	Hip Breadth, sitting	Breadth of the body measured across the widest portion of the hips
6	Shoulder height, sitting	Vertical distance from a horizontal sitting surface to the acromion
7	Elbow height, sitting	Vertical distance from a horizontal sitting surface to the lowest bony point of the elbow when it is bent at a right angle with the forearm horizontal
8	Buttock-popliteal length (seat depth)	Horizontal distance from the hollow of the knee to the rearmost point of the buttock
9	Lower leg length (popliteal height)	Vertical distance from the footrest surface to the lower surface of the thigh immediately behind the knee, bent at right angles
10	Upper hip bone height, sitting	Distance from floor to the uppermost point of the left hipbone. The hipbone is traced by palpating [11, 16].
11	Lowest rib bone height, sitting	Distance from floor to the bottom of the lowest left rib. The lowest left rib is traced by palpating [11, 16].

Illustrations of anthropometric dimensions corresponding to Table:-

II. CONCLUSION

The objective of designing a single-passenger off-road race vehicle with high safety and low production costs seems to be accomplished. The design is first conceptualized based on personal experiences and intuition. Engineering principles and design processes are then used to verify and create a vehicle with optimal performance, safety, manufacturability, and ergonomics. The design process included using Solid Works, CATIA and ANSYS software packages to model, simulate, and assist in the analysis of the completed vehicle. After initial testing it will be seen that our design should improve the design and durability of all the systems on the car and make any necessary changes up until the leaves for the competition.

REFERENCES

[1] John C. Dixon; Suspension analysis and computation geometry; ISBN: 978-0-470-51021-6; October 2009

[2] Thomas D. Gillespie; Fundamental of Vehicle Dynamics; ISBN: 978-1-56091-199-9; February 1992

[3] Practical experience -
R.P.M Bhopal (M.P)
RPM, near Ratibad Town,
Bhadbhada Road,
Bhopal, Madhya Pradesh – 462023
Polaris Indore (M.P)

[4] MyCar Polaris, Pipliya Kumar Mangal Compound Near Mttal Toll Kanta Indore, India – 452010

AUTHORS

First Author – Deep Shrivastava, Bachelors in Engineering (Mechanical engineering), Oriental institute of science and technology Bhopal and deepshrivastava2493@gmail.com