IOT Based Smart Public Transport System

Parag Gawade [*], Prof.Meeankshi A [**]

[*] Electronics & Telecommunication Engineering, JSPM's Bhivarabi Sawant Institute of Technology & Research, Wagoli, Pune, India.
[**] Prof.Meeankshi A, Electronics & Telecommunication Engineering, JSPM's Bhivarabi Sawant Institute of Technology & Research, Wagoli, Pune, India.

Abstract- Internet of Things (IoT) joins the objects of this present reality to the virtual world, and empowers at whatever time, anyplace network for anything that has a turn ON and turn OFF switch. It constitutes to a world where physical things and humans and other living things, and virtual information and situations, collaborate with each other. Substantial measure of information is created as expansive number of gadgets is associated with the web. So this expansive measure of information must be controlled and changed over to helpful data keeping in mind the end goal to create productive frameworks. In this paper, we concentrate on to a urban IoT framework that is utilized to construct Intelligent Transportation System (ITS). IoT based intelligent transportation systems are intended to bolster the Smart City vision, which intends to utilize the progressed and capable communication systems for the organization of the city and the residents.

Index Terms- IoT, ITS, NFC, WSN.

I. Introduction

As the Wireless Sensor Networks have scientificallyadvanced more rapidly and more proficiently, they have become the key source for the advancement of IoT. They find use in almost all fields including smart grid, smart transportation systems, smart home, smart hospitals, and so on. The accomplishment of the above lead to the smart city development as mentioned by our Indian Prime Minister.

a. Background

The idea of Internet of Things (IoT) was prepared in parallel to WSNs. The expression internet of things was conceived by Kevin Ashton and indicatesthedistinctivelydistinguishablethingsand their computer-generateddemonstrations in an "internet-like" arrangement. These items may vary from vastconstructions, aircrafts, auromobiles, engines, any sort ofproduces, productions, to humans, animals and plants and even their specific body parts. One of the significant developments of WSNs will be after they are incorporated with IoT.

This paper intends to build up an intelligent transportation system. The future streets will have the capacity to oversee traffic blockage much superior to today's systems. It has been envisioned that in a time of around 20 to 30 years the current traffic system would enhance to a degree where automobiles can interact with each other with no human collaboration to control the traffic. Therefore travel could be made less exhausting and more secure. Sensors would be fitted in automobiles and these automobiles will be set on the streets. These would observe the traffic and send the data remotely to a "central traffic control system," a center point that processes information to resend the data back to vehicles out and about. For example if there's huge traffic jam, the central traffic control system would be told over WiFi and they return respond by enforcing speed restrains that the vehicles must abide by in the region where the jam has occured.Since a huge number of cash is spent on road traffic jams each year, it has been approximated that, by the realization of smart transportation systems, the cash spent will get decreased by no less than 15%. Extra advantages incorporate parking direction. As opposed to driving around the entire vicinity searching for space, the drivers would be guided over the WiFi regarding the empty spaces accessible close to their current position. Likewise, the drivers would be shown the shortest possible road to reach the desired place so that carbon dioxide emissions can be controlled. This framework could even caution the drivers about any school that is nearby where there might be bunches of students on the road and the optional course would likewise be recommended. In this innovation the telecoms join with WiFi consequently creating better results for the clients and also the buyers both at their jobs and also other places. The paper is organized as follows. Section II describes about the act of spontaneities that has been done to the common transportation framework. Section III clarifies the results and analysis of the current system and how proficient the proposed framework will be and the outcomes are thought about. Segment IV clarifies the disadvantages of the systems and the future upgrades that can be made to this framework. A Smart Assistance for Public Transport System is to be developed. The Public transport chosen is Public Bus. The issues related with government transport are examined and thought about. The issues, for example, bus arrival time expectation [2], no. of people accessible to the bus [2], accident reporting and safety, alcohol detection for driver [3], bus answer to travellers through on the web/non internet alternatives are accessible [4]. In the fundamental technique utilized is GPS/GSM is used. The PIR sensors are to be utilized at front and back entryway of the bus for individual counting in/out from the bus. Additionally, MQ3 alcohol detection sensor is utilized to measure liquor level of the driver and if alcohol is identified then transport won't begin and a message will be given to PMT through GSM network asking for replacement of driver. At that point an accelerometer is utilized to sense accidents and at the same time message is sent to PMT, specified hospital and enlisted police headquarters with the intention that they can give appropriate help to the passengers at the instance of mishap. At the point when the switch is been pressed, a message will be sent to enlisted police headquarters containing the information about transport and the area where the accident has occured. The accompanying fig. represents the basic idea for the system.

Motivation

The inspiration for this project was to limit and curtail the difficulties and issues related with public transport framework in India. India is a developing country with tremendous populace. Here, we confront numerous issues in our day by day life, for example, water, power, logistics, economy. In this way, to overcome no less than one of these issues as a civilian of our nation I have chosen to contribute my side to provide safe and intelligent Public Transport System for urban communities.

As we experience day to day issues with our public transport, my commitment is to limit the issues identified with it. The fundamental issues is of seat utilization i.e. no. of people or seats accessible in the bus. At the same time bus arrival and leaving time and real-time bus position information on Google map is additionally presented. The transport has elements of handicap ramp in order to give specially able individuals to make use of the bus effortlessly.

II. LITERATURE SURVEY

In past works given in SeokJuLee[1], they have actualize transport vehicle tracking for UCSI University, kuala Lumpur, Malaysia. It is developed for settled course, giving the candidates with status of bus after determined time period utilizing LED panel smart phone application. Technique used is Ardunio microcontroller Atmega328 based Ardunio UNOR3 microcontroller. Additionally, for GPS, GSM/GPRS module a similar controller is used. Program to control them is composed in C programming language, compiled and saved in microcontroller's flash memory. The testing results in this paper give; testing in-vehicle module, testing web server and database, testing smart phone app.

In PengfeiZhou[2], foreseeing transport entry time with cell phones is given. Innovation utilized is participatory detecting of users. This model framework with various sorts of Android based cell phones and thoroughly explore different avenues regarding the NTU grounds carry transports and in addition Singapore transports over a 7-week time span, then taken after by London in 4-weeks. The proposed framework is arrangement is all the more for the most part accessible and is vitality agreeable. The assessment comes about recommend that the proposed framework accomplishes extraordinary expectation exactness contrasted and those operator initiated and GPS based solutions. The model framework predicts transport entry time with average tolerance of 80 sec.

In MamanAbdurohman[3], versatile tracking framework is utilized to monitor vehicles position and in uncommon cases there are much helpful data can be studied, for example, speed, cabin temperature and no. of passenger. This monitoring procedure is done utilizing GPS module, and sending the information to a server through GSM modem. It is proposed machine-to-machine (M2M) communication from which Open Machine Type Communication (Open MTC) as correspondence platform for collecting and preparing area information. The area is shown on Google outline. The Open MTC platform that is produced by Fraunhofer FOKUS in view of ETSI M2M Rel.1 specification.

In Minoru Sakairi[4], security measures to anticipate drunk and sluggish driver is specified. A framework is created called Water-Cluster-Detecting (WCD) for this reason. A expired gas contains water clusters that have a soaked vapour pressure of 47 mmHg and temperature of around 37C. This idea is utilized here for WCD, it identifies breath by measuring electric currents of positively or negatively charged water content in breath that are isolated by utilizing an electric field. WCD breath sensor is couples the WCD breath sensor with an alcohol sensor and it reproduces and identifies electrical signals of both breath and liquor in the breath. It recognizes breath from around 50 cm and can likewise test the level of readiness of a subject sitting in the driver's seat. It's tested by utilizing individual's expansiveness, not by a simulated source.

InMashoodMukhtar[10], The vehicle tracking system exhibited in this paper can be utilized for situating and exploring the vehicle with a precision of 10 m. The situating is done as latitude and longitude alongside the correct area of the place, by making utilization of Google maps. The system tracks the area of a specific vehicle on the client's demand and reacts to the client by means of SMS. The got SMS contains longitude and latitude that is utilized to find the vehicle on the Google maps. The vehicle tracking system enables a client to: remotely switch ON the vehicle's ignition system, remotely switch OFF the vehicle's ignition system, remotely bolt the entryways of the vehicle, remotely open the entryways of the vehicle, and remotely track a vehicle's area. A few changes were rolled out in which most striking improvement was modification of the tracking technique (i.e. Access to 32 channels of satellites rather than 3). The vehicle tracking system was manufactured effectively. In any case, the vehicle tracking system could be made more strong by utilizing more exact GPS unit.

In Mr. Prafull D. Patinge[11], This framework therefore diminishes the vehicle idle time as its being checked by officers by central authorities. The ideally planned courses can likewise benefit in better fuel utilization. This framework can likewise incorporated with various advances for extra elements and because of utilization of prevalent and broadly utilized technologies at affordable value makes it perfect for urban zones.

In C.Prabha[12], This paper presents vehicle accident detection and ready framework with SMS to the mobile numbers specified by the victim. The GPS tracking and GSM alarm based algorithm is designed and executed with LPC2148 MCU in embedded framework area. The proposed Vehicle accident detection framework can track geographical data consequently and sends an alert SMS in regards to accident. Trial work has been completed precisely. The outcome demonstrates that higher affectability and precision is to be sure accomplished utilizing this project. EEPROM is interfaced to store the mobile numbers for all time. This made the project more easy to use and dependable. The proposed technique is checked to be profoundly valuable for the automobile sector.

In VarshaGoud[14],This paper gives the outline which has the advantages of being economical, easily movable, small size and simple expansibility. The platform of the framework is ARM alongside MEMS, Vibration sensor; GPS and GSM, interfacing which abbreviates the caution time to an expansive degree and find the site of accident precisely. This framework can solve the issues of scarcity of automatic model for accident location

detection. Thus, the time for finding out the area is decreased and the individual can treated at the earliest opportunity which will spare many lives. This framework will have expansive application prospects as it incorporates the positioning frameworks and the system of emergency health care services. The accident can be distinguished by both vibration sensor and MEMS sensor which will give the precise data. The controller will handle the information, when information is received by the it and the alarm is ON and message is sent through the GSM module. The geographical coordinates and the time and the site of the accident is identified by the GPS module. A substitute condition is given by pressing a switch, to interrupt the flow of sending the message if there should be an occurrence of no injuries; this will save time of medical emergency services and unnecessary disturbing which makes panic in such strange conditions. The accident area automatic detection will help us to give security to the vehicles and to the lives of the general population. The high value is given to the lives of the general population. Thus, this paper gives a plausible answer for trafficf risks and it offers security to vehicle and lessens loss of human lives and property.

In F.Wahl[17], By utilizing a genuine test organization in an office building, we got execution figures for our sensor models. The outcomes affirmed our way to deal with bearing location and in this manner the potential for individuals numbering per office space. Thusly we utilized observationally got PIR sensor qualities to investigate the execution of two individuals include estimation calculations an office floor reproduction. Our reproductions affirmed that the probabilistic separation based calculation can beat a more basic bearing based numbering. Our kin including methodology could be connected any (office) building including bigger open office spaces, where subspaces can be characterized utilizing virtual passages. The evaluated individuals tally per building space is a key data to progressively control building frameworks identified with HVAC and lighting.

III. BASIC BLOCK DIAGRAM FOR SYSTEM

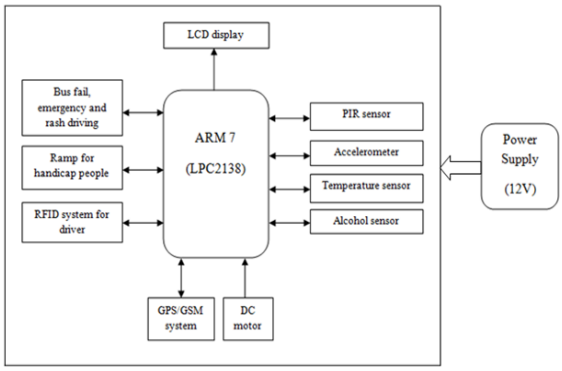

Figure 01: Functional diagram for Smart Public Transport System.

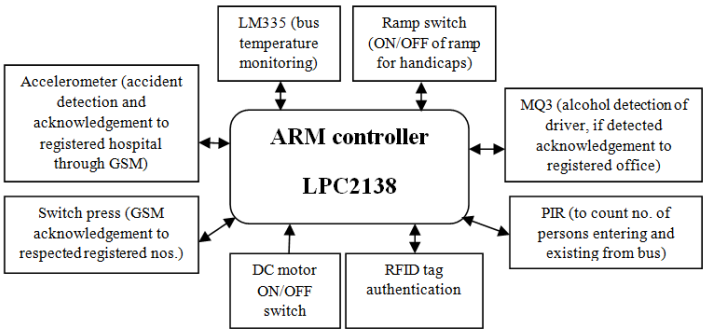

Figure02 : Methodology for system execution.

Explanation-

1. ARM (LPC2138):This square is heart of our framework. It works as CPU unit. It forms every one of the information of the sensor and showcases it on LCD and respected output gadget. It is essentially utilized as a result of N no. of sensors associated with the controller. It is chosen since it has capacity to process parallel information and at the time it keeps up the match up in the framework. This controller has 3-satge pipeline which helps in quick process. As it has 40 GPIO pins, it make simple of accessibility to associate 2^40 sensors to it. Here, it takes contribution from different sensors (both simple and advanced) and forms it to required yield.

2. Switches (4-leg push-catch): Five switches are utilized for different applications. It's a 4-leg push-button switch. At first its "released" and when "pressed" it considers an input. The different applications utilized for switch are Emergency switch, Rash driving switch, Ramp switch, Location following switch and System ON/OFF switch. Switch acts a hinder to controller and after that the controller servers the necessity of the switch. In the event that its area following switch, it brings the scope and longitude of the area at that specific moment and shows on LCD and in the meantime gives the area on brilliant application for following.

3. PIR sensor unit: This unit goes about as a input to the processor. It's associated with the ADC input stick of the controller. As the sensor is a simple sensor, it takes in simple info and asses it to the control unit. At that point, the control unit changes over simple signs into advanced ones and helps it to show on LCD unit and in the meantime additionally refreshes the individual depend on the shrewd application for individual accessibility area.

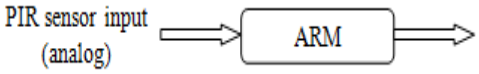

1. **Accelerometer (ADXL335):**Thisunit is used for accident detection and acknowledgement system. The input the control unit is analog as it's an analog sensor. It gets shocks/vibrations as input and passes it to the controller. It is programmed to detect accident at 700 at X-axis and Y-axis. The controller converts the analog input into digital and generates output at GSM port and LCD display respectively.

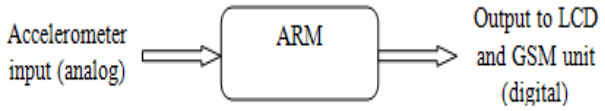

2. **Alcohol sensor (MQ3):**Thissensor is connected to ADC pin of ARM. As the sensor is an analog sensor, also known as CO2/gas sensor. It detects the change the change of alcohol % in the air. It acts as input to controller and controller converts the detected level into digital value and displays as output on LCD and GSM system. The % level of detection of alcohol is set to 80mg.

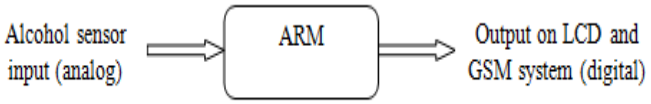

3. **Temperature sensor (LM35):** This sensor is generally used to detect the temperature of an environment. It's an analog sensor, so connected to ADC pin of the controller. Input to the sensor is analog temperature value and the sensor acts as input to the controller. Then, the controller converts the analogy temperature value into digital and continuously displays it on LCD.

4. **GSM/GPS unit (SIM900):** These units are connected to the GPIO ports of the controller. The GSM unit is used to acknowledge the system via SMS to the registered nos. and the GPS system is used to collect the real-time co-ordinates for the system. These units are connected at the output of the system. The GSM/GPS unit drives output for accelerometer, alcohol sensor, rash driving switch, emergency switch, location tracking switch, and PIR sensor respectively. The GSM/GPS port is serially connected with the system.

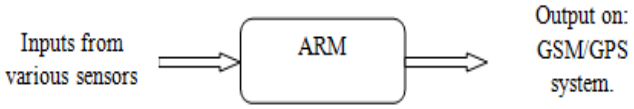

5. **RFID reader (EM-18):** This unit is used as authenticator for the system. The input to the reader is RFID card. The reader decodes the serial no. of the card and if the no. matches the code then it provides us authentication to operate the system, up to that the system will not start. To make the authentication visible, a LED is mounted to glow.

IV. METHODOLOGY

a. As compared to Indian technologies; till 2010 there were complete mechanical public transports used. Especially talking about bus as transport system, till date traditional i.e. mechanical system are still used.

b. But, there as technology is developing, there are significant changes that took over traditional once. For ex. Private transport are far better in technology as compared to public transport by government once. They include, automatic light control, GPS tracking, WIFI, A.C., T.V. unit and any more.

c. While government transport system are still mechanical. Now-a-days, government buses in Pune, Maharashtra are also developing. For ex. Volvo, it includes facilities such as; A.C., digital display for next stop indication along with announcements, emergency door exists.

d. Another ex. Is Rainbow bus. This bus has all features such as Volvo, the only difference is that bus stops are modernized. The stops have automated door opening and closing when bus arrives at the stop. The door that the stop senses is emergency door. The stops also have digital LCD displays showing list of bus to arrive and depart from stops along with their timings.

e. Also in other states such as Gujarat, Karnataka, West-Bengal, Punjab, etc the public transport system are more advanced than Maharashtra.

- **Hardware:**
  - For hardware basic technology to be used is GPS/GSM technology for bus tracking and monitoring.
  - Accident detection technology for vehicles is to be used for accident detection and GSM technology to be used for its monitoring.
  - PIR sensors are to be used for counting of public that travelled in the bus at front and rear door. Temperature sensor is used to monitor temperature of the bus.
  - Safety switches along with SMS acknowledgment to registered police station are used as indicators for rash driving, bus fail and emergency case.
  - RFID authentication is used for driver, and ramp for handicap people so that it becomes convenient and easy for them to use public transport.
- **Software :**

- Android application is to be developed for smart phones to make the bus tracking and monitoring easy and fast.

- For the controller i.e. for ARM7 processor Embedded C language is used for programming.

- **System Developing and Testing:**

  - For Hardware: Flash Magic for program burning, Dip trace for PCB designing and android emulator for application testing.

  - Keil4: Used for program debug and simulation.

  - Java IDE (Eclipse Luna): Used to develop java environment for serial communication between prototype and PC.

  - MySQL: Used to create database for mobile app.

V. ALGORITHM FOR SYSTEM EXECUTION

- **Setup for prototype:**
  1. Hardware prototype to be connected with adapter.
  2. Antenna to be connected with GPS unit and free the antenna in free sky.
  3. Connect the prototype with laptop.
  4. Open the Java IDE setup.

- **Algorithm for hardware demonstration:**

1. Initialize the hardware.
2. Grant access to the system using RFID unit.
3. Initialize LCD and sensors.
4. LCD displays: Initial value of Temperature sensor, Value of Accelerometer in X-axis, Value of Alcohol sensor and PIR sensor count.
5. If system ON/OFF switch pressed, start the system moment.
6. When the value of MQ3 sensor changes i.e. if the value of alcohol content changes, the GSM system sends a SMS acknowledgement to the registered no. that the driver is drunk and real-time co-ordinates of the location. The alcohol contents can be changed by spraying a perfume or by taking alcohol closer to the sensor manually.
7. When an accelerometer is been vibrated or shocked, it detects accident when the X-axis and Y-axis changes above 300gravity and 700gravity respectively. Then, the GSM unit sends an acknowledgement SMS to the registered mobile no. containing the message of accident detection and real-time co-ordinates of the location.
8. If location tracking switch is pressed, then it tracks real-time location for tracking the system. This location is displayed on map on smart app.
9. While, at entry and exit gate of the system PIR sensor are mounted for person count. Increment of person count is at entry gate and decrement of person is at exit gate. Then, the sum of increment and decrement is display on smart app.
10. When ramp switch is pressed, opening and closing of ramp is done.
11. When emergency and rash driving switch is pressed, they acknowledge SMS through GSM unit with GPS co-ordinates to the registered.

- **Algorithm for software demonstration:**

1. Open the Eclipse Luna (Java IDE).
2. Select the main page and run as java application. Then, select com port to which system is connected through USB port.
3. Set all the properties i.e. baud rate, parity bits, start and stop bits accordingly.
4. As soon as properties are set, it displays no. of persons available and when location tracking switch pressed, it gets the location as latitude and longitude values on the main page.
5. Then, run the main project on run on server and then finish by selecting Tomcat v8.0 Server at local host.
6. Then, the application page on browser opens.
7. At homepage, search options are provided for bus searching.
8. When searched for bus, it displays the bus details and location to track the bus.
9. If track pressed, then on Google map displays the current real-time location of the bus.

VI. EXPERIMENTAL RESULTS AND ITS DISCUSSION

1. HARDWARE RESULTS

Fig.25 represents top view of the system. It represents the hardware prototype (robot) built to represent public transport system bus.Fig.26 shows prototype setup for the system. The setup includes hardware and PC.

Figure 03: Prototype implementation of the system.

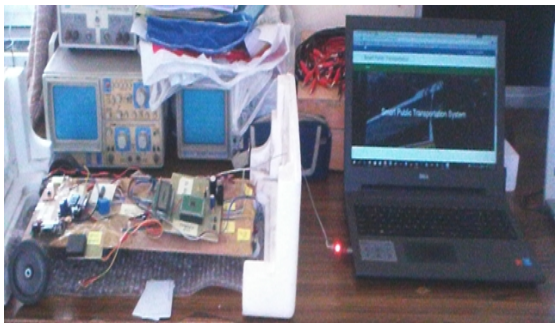

Figure04 : Setup for demonstration.

Fig.27 represents output for ramp for handicap people. The ramp is designed using CD drive. Fig (a) represents opening of ramp and fig (b) represents closing of ramp. Opening and closing of ramp is operated with help of switch.

2. SOFTWARE RESULTS

Fig.30 shows smart app designed and installed in mobile phone of user.

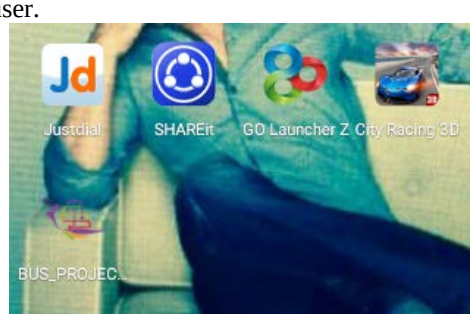

Figure05 : Smart app for the system on menu.

Figure 05: Smart app GUI.

Fig.32 represents bus details and bus location tracking on smart app.

Figure06: Result of smart app for the system tracking and person availability.

VII. CONCLUSION

The system to be designed is fully secured and smart assisted public system. The implementation of the system is to be done for bus. ARM7 processor is used as controller to control the whole processing [4]. A system prototype is developed for testing of three sensors i.e. accelerometer, bus fail switch and PIR sensors. The PCB is developed on glass epexicresion material. PCB is single layer PCB. Designing and layout of PCB is done on Dip trace tool due to its ease of availability and use. Required testing programs are developed for testing of sensors. The coding is been done using Keil4 software version.The code burning is done by using Flash Magic tool with baud rate of 9600bps.The system overcomes basic mechanical, Volvo and BRT systems. It's more secure, smart and advanced.As emergency switch, bus fail switch and accident detection is added the system becomes secure The system is smart and advanced as it has various features of alcohol detection, GPS tracking, GSM acknowledgement, ramp for handicaps, etc.

REFERENCES

[1] SeoJuLee, GirmaTewolde, Jaerock kwon, "Design and Implementation of Vehicle Tracking System using GPS/GSM/GPRS Technology and Smartphone Application", IEEE world Forum on Internet Of Things (WF-IoT), March 2014, Seoul.

[2] Pengfei Zhou, Student Member, IEEE, YuanqingZheng, Student Member, IEEE, and Mo Li, Member, IEEE,"How Long to Wait? Predicting Bus Arrival Time with Mobile Phone Baseda Participator Sensing",IEEE Transactions on Mobile Computing, vol.13, no. 6, June 2014.

[3] MamanAbdurohman, Anton Herutomo, Vera Suryani, AsmaElmangoush, Thomas Magedanz, "Mobile Tracking System Using Open MTC Platform Based on Event Driven Method", 1st IEEE International Workshop on Machine to Machine Communications Interfaces and Platforms 2013.

[4] Minoru Sakairi, "Water-Cluster-Detectiang Breath Sensor and Applications in Cdars for Detecting Drunk or Drowsy Driving", IEEE Sensors Journal, vol.12, no. 5, May 2012.

[5] IshaqMd, D.ShekarGoud, PJ.Saritha,"Implementation of logistics managemfgent system based on wireless technologies",Global Journal of Advanced Engineering Technologies, Vol.1, Issue3-2012.

[6] M. A. Hannan, A. M. Mustapha, A. Hussain and H. Basri, "Intelligent Bus Monitoring afnd Management System", Proceedings of the World Congress on Engineering and Computer Science 2012 Vol II WCECSf 2012, October 24-26, 2012, San Francisco, USA.

[7] Dhivya M and KathiravanS,"Driver Authentication and Accident Avoidance System for Vehicles",Smart Computing Review, vol.5, no.1, February 2015.

[8] Ch. RamyaKeerthi, G.Shanmukh, Dr. R. Sivaram, "Various Accident Detection Technologies and RecoverySystems with Victim Analysis", International Journal of Advanced Trends in Computer Science and Engineering (IJATCSE), Vol.2 , No.3, Pages : 07-12 (2013) Special Issue of ICCSIE 2013 - Held during 24 May, 2013 Bangalore.

[9] PratikshaBhuta, Karan Desai, ArchitaKeni,"Alcohol Detection and Vehicle Controlling",International Journal of Engineering Trends and Applications (IJETA) – Volume 2 Issue 2, Mar-Apr 2015.

[10] MashoodMukhtar,"GPS based Advanced Vehicle Tracking and Vehicle Control System",I.J. Intelligent Systems and Applications, 2015, 03, 1-12 Published Online February 2015 in MECS.

[11] Mr. Prafull D. Patinge, Ms. N. R. Kolhare, "Smart Onboard Public Information System using GPS & GSM Integration for Public Transport", International Journal of Advanced Research in Computer and Communication Engineering, July 2012, Vol. 1, Issue V.

[12] C.Prabha, R.Sunitha, R.Anitha, "Automatic Vehicle Accident Detection and Messaging System Using GSM and GPS Modem", International Journal of Advanced Research in Electrical, Electronics and Instrumentation Engineering, July 2014, Vol. 3, Issue 7, pp. 10723-10727.

[13] Mr. Pradip Suresh Mane, Prof. VaishaliKhairnar, "Analysis of Bus Tracking System Using Gps on Smart Phones", IOSR Journal of Computer Engineering (IOSR-JCE) e-ISSN: 2278-0661, p- ISSN: 2278-8727Volume 16, Issue 2, Ver. XII (Mar-Apr. 2014), pp. 80-82.

[14] VarshaGoud, V.Padmaja, "Vehicle Accident Automatic Detection and Remote Alarm Device", International Journal of Reconfigurable and Embedded Systems (IJRES), Vol. 1, No. 2, July 2012, pp. 49~54.

[15] C.Vidya Lakshmi, J.R.Balakrishnan, "Automatic Accident Detection via Embedded GSaM message interface with Sensor Technology", International Journal of Scientific and Research Publications, April 2012, Volume 2, Issue 4.

[16] SaurabhChatterjee, Prof. BalramTimande, "Public Transport System Ticketing system using RFID and ARM processor Perspective Mumbai bus facility B.E.S.T", International Journal of Electronics and Computer Science Engineering, IJECSE, Volume1, Number 3, pp. 1619-1622.

AUTHORS

First Author – Parag Gawade, Electronics & Telecommunication Engineering, JSPM's Bhivarabi Sawant Institute of Technology & Research, Wagoli, Pune, India, paragdgawade@gmail.com

Second Author – Prof.Meeankshi A, Prof.Meeankshi A, Electronics & Telecommunication Engineering, JSPM's Bhivarabi Sawant Institute of Technology & Research, Wagoli, Pune, India, annameena19@gmail.com