Investigation on Wireless Charging

[1]R V S Narayana Kumar, [2]T Giridhar Sai

[1,2]Department of Electronics and Communication Engineering, Geethanjali Institute of Science and Technology, Andhra Pradesh, India

Abstract- Wireless charging is a innovation of transmitting power through an air gap to loads f with the end goal of energy recharging.The current advance in wireless charging procedures and improvement of business items have given a promising option approach to address the energy bottleneck of traditionally convenient battery-controlled gadgets. However the fuse of wireless charging into the existing wireless communication system additionally carry a progression of testing issues with in regards to execution, scheduling and power administration.In this article we introduce far reaching diagram of wireless charging procedures, the improvements in specialized measures and some system applications. Actually the system applications of these generally have a place with medical implantation and versatile chargers for any electrical and electronic loads.Furthermore, we examine open difficulties in executing wireless charging innovations.

Index Terms- Wireless charging, Wireless Power Transfer, Magnetic coupling, Resonance coupling, Radiative/RF radiation, Acoustic Power transfer, Ultrasonic Resonance.

I. Introduction

Wireless charging is also called as wireless power transfer, is a technology that enables the source to transmit the electromagnetic energy to a electrical load through the air gap without interconnecting cords. This innovation is drawing in an extensive variety of utilizations from a low power tooth brush to high power vehicle in view of its comfort and better client encounter.Presently a-days, this innovation is quickly developing from speculations towards the standard component of a business item particularly if there should be an occurrence of keen contraptions. Many driving organizations like Samsung, Apple, Huwaei, started to discharge new era mobiles which are having in-fabricated wireless charging ability.Presently a-days is quickly developing from speculations towards the standard component of a business item particularly if there should be an occurrence of keen contraptions. Many driving organizations like Samsung, Apple, Huwaei, started to discharge new era telephones which are having in-fabricated remote charging ability.IMS look into [3] imagined that wireless charging items will be 4.5 billion market by 2016 and it crossed the farthest point they evaluated. Pike inquire about [4] evaluated that the cordless controlled items will be tripled by 2020 getting to be 20 billion market.

Comparing to the traditional charging techniques the wireless charging has the following benefits:

- Firstly, it enhances the user-friendliness as the hassle from connecting cables is expelled
- Secondly, diverse brands and distinctive models can charged by the same charger.
- Thirdly, it enhances the flexibility, especially for the devices for which replacing their batteries or connecting cords .
- Fourthly, it produces better durability (i.e., water proof and dust proof) for contact free devices.
- Fifthly, the wireless charging can give the asked for control by the charging gadgets on request mold and in this manner more adaptable and effective.

Nevertheless, normally wireless charging incurs higher implementation cost contrasted with wired charging. First, a wireless charger should be introduced as a substitution of conventional charging cord. Second, a mobile requires implantation of a remote power reciever. In addition, as wireless chargers regularly create more heat than that of wired chargers, extra cost on making material might be brought about.

The development of wireless charging is mainly going in two directions they are:

1. Radiative wireless charging (RF or radio frequency based wireless charging).
2. Non-radiative wireless charging (coupling based wireless charging).
3. Acoustic wireless charging (ultrasonic resonance based wireless charging)

Radiative wireless charging receives EM waves, precisely RF waves or microwaves for the power exchange through the medium as radiation(given in Section4.2). The energy exchanged relies on upon the electric field of the EM wave which is radiative. Because of the safety issues raised by RF exposure [5] these charging for the most part works in low power area. On the other hand, *non radiative wireless charging* in view of the coupling of the magnetic field of the two coils inside a separation of curls measurement for energy transmission(given in Section4.1). As the magnetic field of the EM wave lessens rapidly than the electric field of the EM wave so in this innovation the power exchange distance is especially restricted. Due non radiative nature, this innovation has been generally utilized as a part of day by day charging exercises.

Aside from the above advances there is a new charging innovation that which was developed as of late. It is '**Acoustic Power Exchange**'. In this really ultrasonics are utilized for the exchange of energy. The guideline required in his innovation was ultrasonic resonance. This innovation has a decent degree going into the market as it can be a proficient and eco-friendly(given in Section4.3).

In this article we expect to give an extensive view on developing wireless charging accusing frameworks along of their principal technologiesand application in correspondence systems. This view covers different real wireless charging advances like inductive coupling, magnetic resonance coupling, RF/microwave radiation, Acoustic(ultrasonic resonance) . The article arrange is as per the following, Right off the bat we will clarify how the wireless charging appeared i.e., history of it and the essential required in cordless power exchange wonder. Besides, the sorts of wireless charging innovations that appeared till now and there separate block diagrams,system flows, functionality, applications, advantages,disadvantages.

II. History

Electromagnetism is the pioneer point of remote power exchange where EM waves convey the energy. The investigation of electromagnetism was begun from1819 when H.C. Oersterd found the electric current createsmagnetic field around it. Later on Ampere's Law, Biot-Savart's Law and Faraday Law had inferred to give some fundamental property of the magnetic field. Tailing them, in 1864 J.C. Maxwell acquainted a few conditions with describe how the electric and magnetic fields are produced and altered each other. Later in 1873 production of Maxwell book ***'A Treatise on Electricity and Magnetism'*** which actually unified the electricity and magnetism[15]. From that point forward the electricity and magnetism are said to be controlled by a same force.

Later on Nicolas Tesla,who is the founder of alternating current electricity, was the first to lead probe wireless power exchange by utilizing microwaves. He concentrated on long-distance wireless power transfer and understood the exchange of microwave signals over a separation around 48 kilometers in 1896. Another significant breakthrough was accomplished in 1899 to transmit 10^8 volts of high-frequency electric power over a separation of 25 miles to light 200 bulbs and run an electric motor[16,17]. However, the innovation that Tesla applied must be racked on the grounds that transmitting such high voltages in electric arcs would make appalling impact to people and electrical hardware in the vicinity.Around the same period, Tesla additionally made an extraordinary commitment to advance the attractive field progress by presenting the well known "Tesla coil", illustratedin 1901, Tesla developed the Wardenclyffe Tower, appeared into exchange electrical energy without cords/wires through the Ionosphere. In any case, because of innovation confinement (i.e., low system efficiency because of large scale electric field), the thought has not been generally additionally created and popularized. Beside Tesla, W.C.Brown, who is the practical engineer invented a component called Rectenna. This component is utilized to exchange the microwave power into electricity[20]. Advance improvements are taken in the rectenna configuration to get high power. This is the historical backdrop of wireless charging innovation.

III. Basic principle of Wireless charging

Wireless power transfer is process which is almost similar to the basic communication system process. Power is needed to be transferred from transmitter to the reciever by using different technologies or schemes(i.e., coupling method,RF method) which is as similar to that of the message signal transfer from the transmitter to the reciever in the basic communication system where we use different types of modulation schemes which are used to transfer the message signal effectively. In a simple way to say the wireless charging technologies are the analogous of modulation schemes in the communication systems

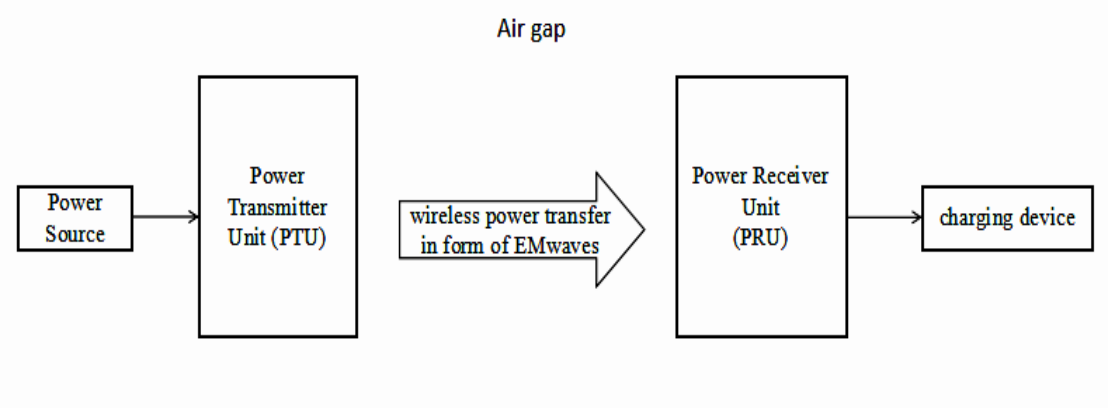

Fig.1. Block diagram of basic wireless charging device

Above figure1 is the basic block diagram of the basic wireless charging technology. The primary square speaks to the power source which is for the most part known for all which gives the electrical power. The following square is the Power Transmitting Unit (PTU) which is the comprises of energy amplifier,matching circuits, A-D converters, correspondence module and resonator(primary) or transmitter. In this square the electrical energy changed over in type of EM waves where the EM waves convey the electrical energy to the following piece through the air gap. This PTU square has a similar functionality of the modulator in the communication system. Alongside PTU ,we have Power Receiving Unit (PRU) which comprises of resonator(secondary) or recipient, rectifiers, DC-DC converters, communication module. Here DC-DC converters rather than DC-AC converters as the load what we take for the most are batteries. The batteries store the energy in form of DC so despite the fact that we give DC input, the battery can take the energy and store it. This is one of the ideal element of favorable position of the wireless charging that is said in Sec-1.

IV. Wireless Charging Technologies

In this segment , we give the fundamental information of wireless charging which covers the standard of innovations, existing use of that innovation. And additionally the charging system configuration in architecture, hardware equipment and implementation

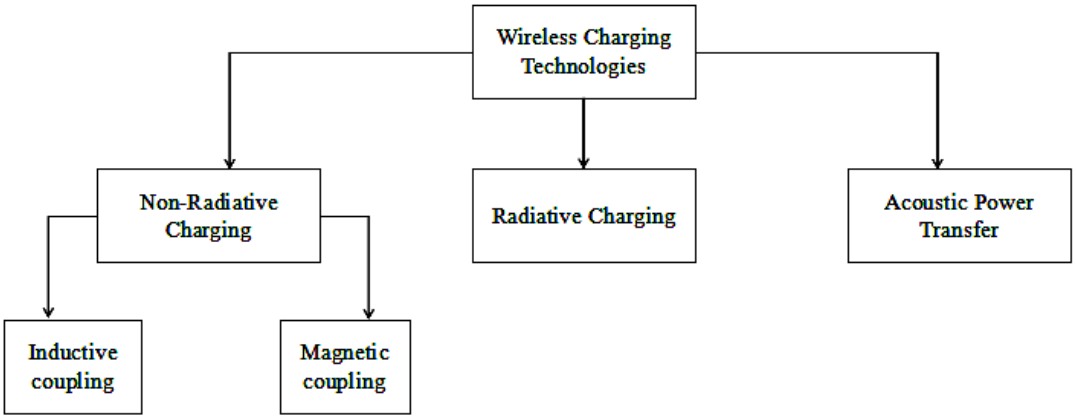

Fig.2. Classification of the Wireless Charging technologies

As illustrated in the above figure2 the wireless charging is extensively characterized into 3 types. They are non-radiative coupling based charging, radiative RF based charging and Acoustic ultrasonic based charging.

4.1Non-Radiative Charging:

The block diagram of the general non-radiative charging is given in figure3demonstratesa block diagram of ageneral non-radiative wireless charging system. The transmitter side consists of i) an AC/DC rectifier, which converts alternating current (AC) to direct current (DC); ii) a DC/DC converter, which alters the voltage of a source of DC from one level to another; and iii) a DC/AC inverter, which changes DC to AC. The receiver side is composed of i) an AC/DC rectifier, which converts high-frequency AC into DC, ii) a DC/DC converter, which tunes the voltage of the DC, and iii) a load for charging applications.

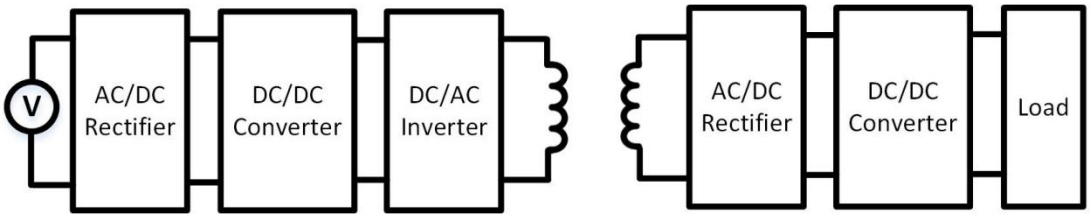

Fig.3. A block diagram of non radiative charging

The wireless charging process works as follows. First, a power source is required to actuate the AC/DC rectifier. As the commercial AC worldwide operates either in 50Hz or 60Hz frequency [9], which is too low to drive wireless charging, the charger increases the AC frequency by converting the AC to DC first, and then raising the voltage of DC and changing the DC back to high-frequency AC power. As the high-frequency AC that runs through the transmit loop coil creates a magnetic field around it, AC is induced at the receive loop coil separated away from the transmit coil by an air gap. The energy receiver then converts the induced AC to DC, and reshapes to the voltage required by the load. The battery of an electronic device can then be replenished at the load.

The above innovation is additionally ordered into three sorts in light of the coupling of the loops for the exchanging the power. They are inductive coupling, magnetic coupling, capacitive coupling. In this capacitive coupling, the achievable amount of the coupling capacitance is based on the area occupied by the device. However for a typical size portable electronic device, it is difficult to create the required power thickness which forces a testing plan impediment Due to this non-radiative charging is realized through two techniques i.e., magnetic inductive coupling, magnetic resonance coupling. These are for near field applications where the electromagnetic field dominates the region which is close to the transmitter and reciever. In case of far field applications the absorption of the radiation does not effect the reciever. By contrast, for near field applications the load was greatly influenced by the field produced by the transmitter[7]. This is because for far-field applications the transmitter and reciever are not coupled[8].

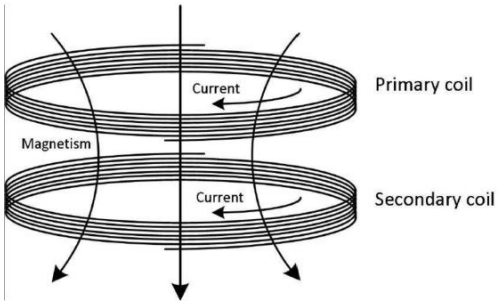

Fig.4.a.Inductive coupling

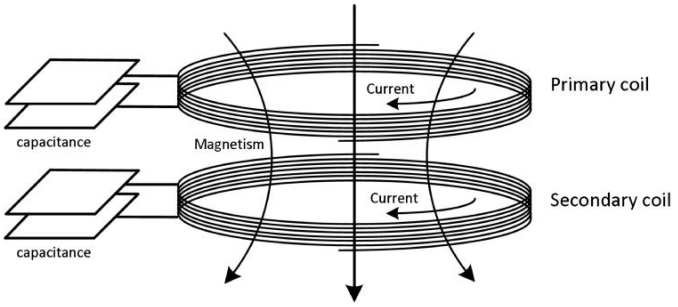

fig.4.b.magnetic resonance coupling

4.1.1 Inductive coupling:

In this technique the electrical energy is transferred between two coils based on the magnetic field induction. The model shown in the figure4.a is the reference one. Inductive Power Transfer(IPT) occurs when the primary coil is excited by the source which overwhelmingly generates the varying magnetic field across the secondary coil of the energy receiver which is within the field, generally less than the wavelength of the field. The near field produces current/voltage across the secondary coil of the energy reciever within the field. This induced voltage can be used to charge wireless devices / storage systems. The frequency of operation of this technique is up to kilo Hertz . The secondary coil should be tuned at operating frequency keeping in mind the end goal to improve the charging efficiency[9]. Actually, the quality variables for this circuits are outlined with low esteems in light of the fact that exchanged power weakens rapidly for substantial quality values. Due the lack of compensation of high quality values the effective charging distance is lessened in terms of centimeters[10].

Features: The advantages of the inductive coupling incorporate simplicity of execution, convenient operation, high efficiency (seen in close distance applications where distance is less than radius of the coil) and ensured safety. Along these lines, it is appropriate and prevalent for gadgets. This innovation is currently utilized as a part of continuous and it was first presented in the mobile business by Samsung. It is only applicable for only near field applications when it comes to far field this is inefficient this is the only drawback of this technology.

4.1.2 Magnetic Resonance coupling:

In this technique the coupling based evanescent wave coupling which generates and transfers the electrical energy between the resonant coils through fluctuating or swaying magnetic fields. As the two resonant coils are operating in same resonant frequency, they are emphatically coupled, high energy transfer efficiency with small leakage to non-resonant externalities. Due to the property of resonance, magnetic resonance coupling is is favorable position of invulnerability to the area and observable pathway exchange prerequisite. Magnetically coupled resonators shown the capability in terms of power transmitting for long distances than the inductive coupling with higher productivity than that of RF radiation approach. Moreover, the one transmitter resonator can be coupled to numerous reciever resonator. In this manner it empowers simultaneous charging of various gadgets [21].

Features: As the magnetic resonance coupling typically operates in megahertz frequency range ,the quality factor of the resonators are high. With the increase of effective charging distance there will be a sharp decrease of coupling efficiency of the resonator and thus results in the decrease charging efficiency. As the magnetic resonance coupling can charge multiple devices concurrently, by tuning the coupled resonators of multiple receiving coils. However mutual coupling occurs between the receiving coils can result in interference,so appropriate tuning of the resonator is required.

4.2Radiative Charging:

In this technology the RF radiation utilizes diffused RF/microwave as the medium to carry the radiant energy. RF waves propagates through the space with the speed of light normally in line of sight. The typical frequency of the microwaves are 300MHz to 300GHz. We can also infrared or X-ray electromagnetic waves for carrying the energy but these radiations are very harmful when contrast to the microwaves so they .

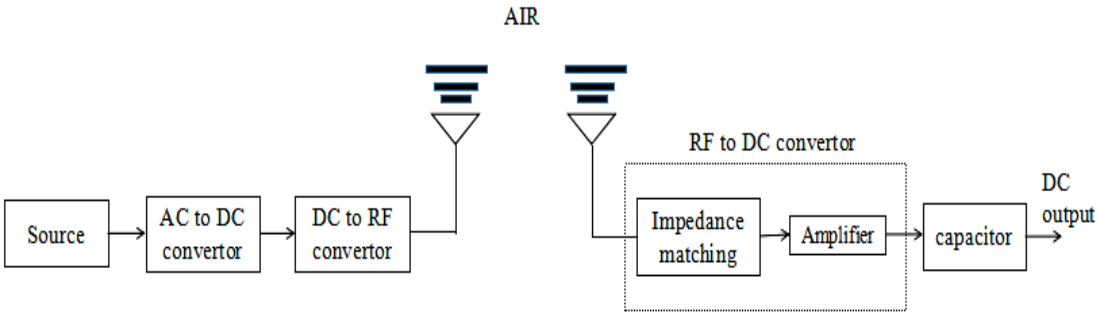

Fig.5. A basic block diagram of radiative charging

Figure 5demonstrates the architecture of a microwave power transmission system. The power transmission begins with the AC-to-DC conversion, tailed by a DC-to-RF conversion through magnetron at the transmitter side. After propagating through the air, the RF/microwave caught by the beneficiary rectenna are redressed into power once more, through a RF-to-DC change.

The RF-to-DC transformation productivity is profoundly reliant on the caught power at receiving antenna, the precision of the impedance matching between the antenna and the voltage multiplier, and the power effectiveness of the voltage multiplier that changes over the got RF signals to DC voltage [13]

Features: The RF energy can be radiated isotropically or towards some direction through beamforming. This former is mostly used on point-to-point communication and broadcasting areas. *Beamforming* can transmit electromagnetic waves, referred to as the energy of beamforming[14] which can expands the power transmission productivity. A beam is formed by antenna component. The sharpness of the energy of the beamforming enhances with the number of transmitting antennas. The use of massive antenna arrays can increase the sharpness of the energy. The recent development has occurred to construct massive antenna arrays like powercaster transmitter and Powerharvester reciever etc.

Besides long transmission distances microwave radiation offers the advantage of compatibility with the existing communication system. **"**Microwaves has a capability to transfer both energy and the information in the mean time**"**, where the amplitude and phase of the microwaves gives the information, while its radiation and vibrations are utilised to carry the energy of the microwaves. The process of getting power and information is called as *Simultaneously Wireless Information and Power Transfer* (SWIPT)[14]. To oblige SWIPT we need to have advanced smart antenna technologies which is employed in the receiver have been developed to accomplish a favorable trade-off between system performance and complexity. By contrast ,the deployment of dedicated power beacons overlaid with the existing communication system. However because of the wellbeing worries of RF radiations the power beacons should be constrained to some following RF exposure regulations[15]. Therefore dense deployment of power beacons is required to power hand-held cellular mobiles with low power and shorter distance.

4.3Acoustic Power Transfer:

In this technology, ultrasonics which are sound waves used to transmit the power through the dielectric air media. This technology is a newly evolved one to have biocompatible wireless power transfer technique in bio-medical implantation i.e., implantable medical devices. The main principle involved is "Ultrasonic resonance"[17]. The engendering of ultrasonic waves is considerably lower than that of electromagnetic waves which are used in induction coupling or radiative technology. The ultrasonic wireless power transmission device can be easily designed and intended to have a short wavelength with moderately low operation frequency. As a result using ultrasonic waves, long distance power transmission is possible whereas the device maintains relatively small device size compared to electromagnetic wave devices.

The ultrasonic waves are generated using Magneto-striction or Piezoelectric method. The ultrasonic waves are used not for power transfer but also for data transmission. The power transmission using ultrasonics is as follows

- First, electrical energy used to produces ultrasonic waves from a piezo-electric component or transducer.
- The ultrasonic waves are transmitted through the media. It can have capability to travel 10-50m indoor(for implantable devices) and 100-200m outdoor.
- The transmitted ultrasonics are received by the receiver where the piezo component is used to convert the ultrasonic waves into electrical energy.

The entire procedure is *Piezo-electric effect and transverse Piezo-electric effect*. As we do not have transmitting and receiving antenna pair in the power transfer process we actually have Transmitting transducers and Receiving transducer instead of pair. In this technology the power is transmitted from transmitter to receiver in different form of energies[18]. The flow of power into various forms of energy is appeared in the figure6

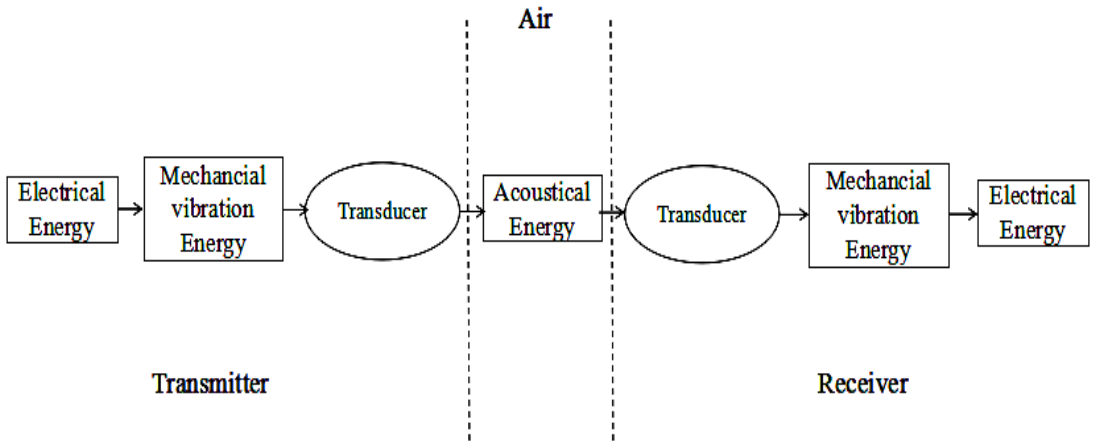

Fig.6. Flow of Energy Conversion during acoustic power transfer

The transmitter have a component necessities consideration to outline in light those transmission from claiming control relies in the matching effectiveness of the transmitting transducer for those getting transducer, Concerning illustration it produces the ultrasonics for obliged frequency that which camwood venture out through the networking What's more achieve those recipient. Secondary transmitting effectiveness might be acquired by bringing the transducers of same layer kind filling which might drive for helter skelter matching effectiveness of the transducers. The transmitter plan may be comparable to that of the rectifier circuit, the place the electrical energy may be provided for the out it provides for mechanical vibration energy which in-turn nourished of the transducer with get those yield, Similarly as acoustic energy(i.e., ultrasonic wave). The receiver plan will be simpler over that of transmitter which comprises of a accepting transducer and Power Administration System(PMS). The accepted acoustic energy of the transducer specifically changes over of the electrical energy. This energy is nourished should PMS will control of the supply of the force of the load.

Features: The advantages of this technology are: the device(i.e.,power transfer setup) size is less when compared to other technologies. It is free from electromagnetic interference and absorption. It is possible to transmit the power not only in air but also in conductor and underwater where electromagnetic wireless transmission is difficult[19].

The table in the provides for the correlation of the wireless charging innovations. It likewise provides for the points of interest ,also hindrances from claiming each innovation alongside those compelling charging separation. By perceiving those over table, acoustic force exchange will be best for constant provisions. Other charging systems would effective be that not powerful in real time

TABLE
Comparison of different Wireless Charging Techniques

Wireless Charging Technique	Advantage	Disadvantage	Effective Charging Distance
Inductive coupling	safe for humans , simple implementation	short charging distance, heating effect, not effective for mobile applications, needs tight alingment between chagrers and charging devices	From few millimeters to few centimeters
Magnetic resonance coupling	Loose alingment between charger and charging devices, charging multiple loads at different power rate, high charging effeciency, non-line sight of charging	Not suitable for mobile applications, limited charging distance, complex implementation	From few centimetres to few meters
RF radiation	Long effective charging distance, suitable for mobile applications	not safe when RF exposure density is high, low charging efficiency, line-of-sight charging	Typically, from few meters to several kilometers
Acoustic Power Transfer	Long effective charging distance , suitable for mobile and medical applications	low charging efficiency	From tens of meters to hundreds of meters

V. Energy conversion efficiency

Wireless charging requires electrical energy to be transformed from AC to electromagnetic waves and then to Direct Current. Each conversion adds the loss in the overall energy, which normally leads to normal wireless charging efficiency hovering around 50% to 70%. This phenomenon is dominant in Radiative and acoustic power transfer technologies where for radiative charging the efficiency is around 70-75% and where it comes to acoustic power transfer the efficiency is around 55-65%, this because the electrical energy need to go for extra stage i.e.,convert to mechanical vibration energy so the charging efficiency dropped by10%. Efforts towards hardware improvement of energy conversion are instrumental to achieve high efficient wireless charging.

VI. Conclusion

Wireless power technology offers the possibility of removing the last remaining cord connections required to replenish the compact electronic devices. This promising technology has significantly progressed during the past decades and established numerous user-friendly applications. In this article, we have presented a paradigm survey on the wireless charging technologies. Initiating from the development history, we have further introduced the fundamentals, main principle, international standards of wireless charging followed by their charging conversion efficiency rates.

The incorporation of wireless charging with the existing communication system creates new opportunities as well as resource allocation. This wireless charging has practical applications in the various communication networks like near-feild beamforcing schemes, distributed wireless charger deployment strategies, multiple access control for wireless power communication which should be additionally examined.

ACKNOWLEDGEMENT

This work was supported by Prof.G.Kameswari, former HOD of Research & Development of Geethanjali Institute Of Science and Technology.

References

[1] www.imsresearch.com

[2] www.pikeresearch.com

[3] C. S. Branch, “Limits of Human Exposure to Radiofrequency Electromagnetic Energy in the Frequency Range from 3 kHz to 300 GHz,” safe code 6, 2009.

[4] X. Lu, P. Wang, D. Niyato, D. I. Kim, and Z. Han, “Wireless N network with RF Energy Harvesting: A Contemporary Survey,” IEEE Communications Surveys and Tutorials, vol. 17, no. 2, pp. 757-789, May 2015.

[5] Nicolas Tesla, “Apparatus for Transmitting Electrical Energy,” US patent number 1,119,732, issued in Dec. 1914.

[6] J.C.Maxwell,A Treatise on Electricity and Magnetism, 1873.

[7] N. Shinohara, “The Wireless Power Transmission: Inductive Coupling, Radio Wave, and Resonance Coupling,” vol. 1, no. 3, pp. 337-3 46, Dec. 2012

[8] N. Shinohara, “Power Without Wires,” IEEE Microwave Magazine, vol. 12, no. 7, pp. S64-S73, Dec. 2011

[9] X. Wei, Z. Wang, and H. Dai, “A Critical Review of Wireless Power Transfer via Strongly Coupled Magnetic Resonances,” Energies, vol. 7, no. 7, pp. 4316-4341, July 2014

[10] Z. Pantic, and S. M. Lukic, “Framework and Topology for Active Tuning of Parallel Compensated Receivers in Power Transfer Systems,” IEEETrans. Power Electron., vol. 27, no. 11, pp. 4503-4513, Nov. 2012.

[11] B. Cannon, J. Hoburg, D. Stancil, and S. Goldstein, “Mag magnetic Resonant Coupling as a Potential Means for Wireless Power Transfer to Multiple Small Receivers,” IEEE Trans. Power Electron., vol. 24, no. 7, pp. 1819-1825, July 2000.

[12] S. Rajagopal, and F. Khan, “Multiple Receiver Support f or Resonance Coupling Based Wireless Charging,” in Proc. of IEEE InternationalConference on Communications Workshops (ICC), Kyoto, Japan, June2011.

[13] S. Ladan, N. Ghassemi, A. Ghiotto, and K. Wu, “Highly Efficient Compact Rectenna for Wireless Energy Harvesting Application,” IEEEMicrowave Magazine, vol. 14, no. 1, pp. 117-122, Jan. 2013.

[14] R. Zhang and C. K. Ho, “MIMO Broadcasting for Simultaneous Wire-less Information and Power Transfer,” IEEE Transactions on WirelessCommunications, vol. 12 , no. 5, pp. 1989-2001, May 2013.

[15] IEEE Standard for Safety Levels With Respect to Human Exposure to Radio Frequency Electromagnetic Fields, 3 kHz to 300 GHz, IEEE C95.1-2005, pp. 27. Oct. 2005.

[16] B. Wozniak, ans j. Dera , Light Absorption in Sea Water , vol.33,Springer,2007,p.63.

[17] B. Noureddine, M. Mohamed, and K. Samian , “Attenuation in transferred RF power to a bio-medical implant due to the absorption of biological tissue”, World Academy of Science, Engineering and Technology, vol.10,pp.165-168, Nov.2005.

[18] Sung Q Lee, Woosub Youm, Gunn Hwang , “Bio-compatible Wireless power Transferring based on ultrasonic resonance” Proc.Meeting on Acoustics, 2013.

[19] Sung Q Lee, Woosub Youm, Gunn Hwang, Kee S.Moon “Wireless Power Transferring and charging for implantable medical devices based on ultrasonic resonance” The 22nd International Congress On sound and Vibration, Florence, Italy, July 2015.

[20] https://en.m.wikipedia.org/wiki/Rectenna]

[21] J. Choi, Y. H. Ryu, D. Kim, N. Y. Kim, C. Yoon, Y.-K. Park, S. Kwon, and Y. Yang, “Design of High Efficiency Wireless Chargi ng Pad Based on Magnetic Resonance Coupling,” in Proc. of European RadarConference (EuRAD), Amsterdam, Netherlands, Nov. 2012.

Authors

First Author – R V S Narayana Kumar, Department of Electronics and Communication Engineering, Geethanjali Institute of Science and Technology,Andhra Pradesh, India, email-id: narayanarevuru435@gmail.com

Second Author – T Giridhar Sai, Department of Electronics and Communication Engineering, Geethanjali Institute of Science and Technology,Andhra Pradesh, India