Design, Analysis and Fabrication of Compound Gear Box

A Aditya Raj Gokul[*], A Surya Praneeth[**], A Chandrasourabh[**], Nishant Jajoo[**], P Rohanth Reddy[**], D Rohan[**]

[*] Department of Mechanical Engineering, Vasavi College of Engineering

DOI: 10.29322/IJSRP.9.06.2019.p90128
http://dx.doi.org/10.29322/IJSRP.9.06.2019.p90128

Abstract- A compound gear train is a combination of gears used to transmit motion and power from one shaft to another. The gears that make up a compound gear usually differ in size and have a different number of teeth. This is useful if there is a need to speed up or slow down the final output. Our motive is to design a compound gearbox, which has a reduction gear ratio of 10:1. Though, most of the contemporary gearboxes with standard gear ratios are available readily in the market, this specific gearbox, which is to be used in an ATV, must especially be designed and fabricated. The module of the gears, materials to be used and dimensions of components, were all calculated based on design theory. Modelling and assembly was done using NX. Stress Analysis of the tooth was done on ANSYS, which provided satisfactory results. The gear casing was manufactured using sand casting with required machining. The gears were manufactured on lathes and hobbing machines. Later gear finishing, grinding and heat treatment was carried out. The gear components were assembled in the casing with lubrication. The gear box is finally mounted in the vehicle cockpit.

Index Terms- NX, ANSYS, Analysis, Fabrication

I. Introduction

This article deals with the design, analysis and fabrication of a compound gear box having a velocity ratio 10:1. A gear is a rotating machine part having cut teeth which mesh with another toothed part to transmit torque. Geared devices can change the speed, torque, and direction of a power source. A compound gear train is a combination of gears used to transmit motion and power from one shaft to another. Consequently, they rotate at the same contact speed. There are a great many tooth profiles that provides a constant velocity ratio. In many cases, given an arbitrary tooth shape, it is possible to develop a tooth profile for the mating gear that provides a constant velocity ratio. However, constant velocity tooth profiles are the most commonly used in modern times which are cycloid and involute profiles. The involute profile design has two advantages, it is easier to manufacture, and it permits the centre-to-centre spacing of the gears to vary over some range without ruining the constancy of the velocity ratio. This article concludes on how gear boxes of velocity ratio 10:1 differ in various aspects.

II. Literature Survey

Power has to be transmitted from Engine to CVT (continuously variable transmission) to gear box and then to wheels of the car. The basic flow of power is shown below:

A. ENGINE SPECIFICATION: Engine specifications are the basis for the designing of gear box. With these specifications input variables such as power and speed are known. The engine that is mandated by SAE BAJA is manufactured and available at Briggs and Stratton. The model number that is accepted is 19L232-0054 G1. This engine has a displacement of 305mm with bore/stroke of 3.12''/2.44''. The compression ratio is from 8.1 to 1 and gross power is 10hp. The oil capacity is 24 ounces and the factory set RPM is 3800.

B. CVT SPECIFICATION: There are four different CVTs that are currently being used by participants, Polaris P90, Gaged engineering CVT, CVTech, Comet. Some of the participants who faced troubles in transmission used CVT sold by Fastparts. This CVT is made for smaller ATVs and gets heated up when used in BAJA vehicles. Continuous variable transmission forms the intermediate system for gearbox and engine. The output at the engine is transmitted to the gear box via CVT. The CVT ratio is generally 0.45:1. There are two parts in a CVT, namely Driver and the Driven. The driver is mated to the engine shaft and the driven is mated to the gear box. The driver and driven are held together by a belt. It is advised to look for the type of mating in the CVT before buying. CVTs offer splines or keyways. Its feasible to buy CVTs with keyway as it can be directly mated with the engine which also has keyway. On the other hand if the CVT has splines then designing a coupler to the engine would allow the mating of such CVT to the engine shaft.

C. SHAFTS: Based on the inputs from the CVT and Engine specifications the input RPM at the input shaft of the gear box would be around 9000rpm. There are 3 shafts present in the gear box, namely input shaft with pinion, intermediate shaft and output shaft.

D. GEARS: There are three gears- intermediate gear, input gear and output gear. The face width and pitch circle diameter of these gears determine the compactness of the gear box.

E. BEARINGS: Bearings are the most crucial components in the assembly and working of the gear box. For spur gears it is necessary to use taper bearings. At a speed of 9000rpm it is certain that the shaft will face axial loads. Taper bearings allows rotation of shafts and also restricts the axial movement of the shaft due to high speeds. In case of helical gears the gears are arrested in place thus there is no chance for the gears to come out of mesh. For helical gears ball bearings can be used instead of taper bearings. For this gear box we require taper bearings at both the ends of the shaft. As spur gears are used the use of taper bearings is compulsory.

F. KEY: There are many methods used to mate shafts and gears, out of which keyways and splines are most commonly used. Keyways are highly capable of taking shear and torsional loads. As the ratio that is required for the gear box is 10:1 which means that for 10 revolutions of the input gear the output gear rotates once, it is advisable to mate the output shaft with the output gear using keyway instead of splines. Splines are advantageous over medium range of speeds with low loads. Also the material used influences the selection of splines or keyways for mating shafts and gears. Harder the material it is advisable to go for spline cutting and softer the material it is viable to use keyways. In this gear box the intermediate shaft is spline cut to mesh witht the intermediate gear and the output shaft has 2 keyways cut for assembly of output gear and the shaft.

G. CASING: The casing encloses completely different sets of spur gears, bearings to support the shafts. For casting, there are several factors to be considered for better result like material properties, mechanical properties, chemical composition, fluidity, boundary clearance, thermal properties, etc. to meet all this criteria.

H. MATERIAL: The ferrous, non-ferrous materials and non-metals are used as shaft material depending on the application. For the given specifications, the most appropriate materials was chosen as EN19/24, yield strength=555Mpa, ultimate strength=780Mpa, young's modulus=190GPa

III. METHODOLOGY:

A. DESIGN CALCULATIONS :

a) INPUT AND OUTPUT SHAFTS: The term 'transmission shaft usually refers to a rotating machine element, circular in cross-section, which supports transmission elements like gears, pulleys and sprockets and transmits power. A transmission shaft supporting a gear in a speed reducer is shown in Fig. The shaft is always stepped with maximum diameter in the middle portion and minimum diameter at the two ends, where bearings are mounted. The steps on the shaft provide shoulders for positioning transmission elements like gears, pulleys and bearings. The rounded-off portion between two cross-sections of different diameters is called fillet. The fillet radius is provided to reduce the effect of stress-concentration due to abrupt change in the cross-section.

$$\tau_{max.} = \frac{16}{\pi d^3}\sqrt{(k_b M_b)^2 + (k_t M_t)^2}$$

For the design of shaft following two methods are adopted,

1. Design based on Strength: In this method, design is carried out so that stress at any location of the shaft should not exceed the material yield stress. However, no consideration for shaft deflection and shaft twist is included.
2. Design based on Stiffness: Basic idea of design in such case depends on the allowable deflection and twist of the shaft. The following specifications were obtained based on the above criteria:-
   Input Diameter=25mm
   Output Diameter =30mm

b) GEARS: Lewis considered gear tooth as a cantilever beam with static normal force F applied at the tip. Assumptions made in the derivation are:

1. The full load is applied to the tip of a single tooth in static condition.
2. The radial component is negligible.
3. The load is distributed uniformly across the full face width.
4. Forces due to tooth sliding friction are negligible.
5. Stress concentration in the tooth fillet is negligible. The gear tooth is stronger throughout than the inscribed constant strength parabola, except for the section at 'a' where parabola and tooth profile are tangential to each other.

Maximum torque calculations table:

RPM	FGR	Velocity	Acceleration	Torque	Traction force
3000	36	1.916	7.043	514.368	1760.93
3200	36	2.044	7.043	514.368	1760.93
3400	36	2.172	7.043	514.368	1760.93
3400	33.6	2.327	6.574	480.076	1643.533
3400	31.2	2.506	6.104	445.785	1526.138
3400	28.6	2.734	5.595	408.636	1398.959

3400	26.4	2.962	5.165	377.203	1291.348
3400	24	3.258	4.695	342.912	1173.954
3400	21.6	3.620	4.226	308.620	1056.555
3400	19.2	4.073	3.756	274.32	939.130
3400	16.8	4.655	3.287	240.038	821.766
3400	14.4	5.431	2.817	205.747	704.371
3400	12	6.517	2.347	171.456	586.977
3400	9.6	8.146	1.878	137.164	469.578
3400	7.25	10.86	1.408	102.873	352.184
3400	5.16	15.157	1.009	73.726	252.399
3500	5.16	15.602	1.009	73.726	252.399
3600	5.16	16.04	1.009	73.726	252.399

Tangential load = $P_t = \frac{P}{v} c_s$; where c_s = 1.8 for heavy shock operating for 8-10hrs a day

Lewis equation: $P_t = (\sigma_w c_v) b. P_c. y$

Where,

y = Lewis form factor =$0.154 - \frac{0.712}{T}$, σ_w= wear load, c_v= $\frac{6}{6+v}$, T= no of teeth, P_c= pitch circle diameter.

Dynamic load using Buckingham method:

$$P_d = P_t + \frac{21v(bc+P_t)}{21v+\sqrt{bc+P_t}}$$

Where $c = \frac{K.e}{\frac{1}{E_p}+\frac{1}{E_g}}$; E_p= young's modulus for pinion; E_g = young's modulus for gear;

k = factor that depends on form of gear = 0.111; e = error = 0.08

Wear load from Hertz equation:

$$P_w = D_p. b. Q. k$$

Where Q = $\frac{2.VR}{VR+1}$ for external gears; k = load stress factor =$\frac{(\sigma_{ef})^2.\sin\emptyset}{1.4}\left\{\frac{1}{E_p}+\frac{1}{E_g}\right\}$; b = face width.

B. MODELLING ON NX 11 :

Step 1:

Copy these parameters into a text file and save it. Rename the file extension to .exp.

[degrees]alpha=20 //Reference Pressure Angle

c=sqrt(1/(cos(alpha))^2-1)/pi() //Parameter of Involute Curve

[mm]m=3.5 //Module

```
[degrees]phi=arctan(yc/zc)+90/z //Rotation angle
[mm]r=m*z/2 //Reference Radius
[mm]ra=r+m //Tip Radius
[mm]rb=r*cos(alpha) //Base Radius
[mm]rc=m*.38 //Tooth Blend Radius
[mm]rf=if(m>1.25)(r-1.25*m)else(r-1.4*m) //Root Radius
t=0 //NX Parameter
[mm]xt=0 //x Coordinates of Involute
yc=rb*(sin(deg(c*pi()))-cos(deg(c*pi()))*c*pi())
yt=rb*(sin(deg(t*pi()))-cos(deg(t*pi()))*t*pi()) //y Coordinates of Involute
(Integer) z=25 //Number of Teeth
zc=rb*(cos(deg(c*pi()))+sin(deg(c*pi()))*c*pi())
zt=rb*(cos(deg(t*pi()))+sin(deg(t*pi()))*t*pi()) //z Coordinates of Involute
```

Step 2:

Launch NX, create a new model file, push the CTRL+E keys and imports the expressions.

Step 3:

Create the involute curve by Law Curve command.

Step 4:

Create a circular pattern on the involute curve.

Step 5:

Draw a line which starts from the end point of involute and tangents the curve. Set its limit by equation.

Step 6:

Launch the Join Curve command and join the line and the involute curve.

Step 7:

Draw the tip and root circles by full circle. Draw a tangent circle for the tooth blend.

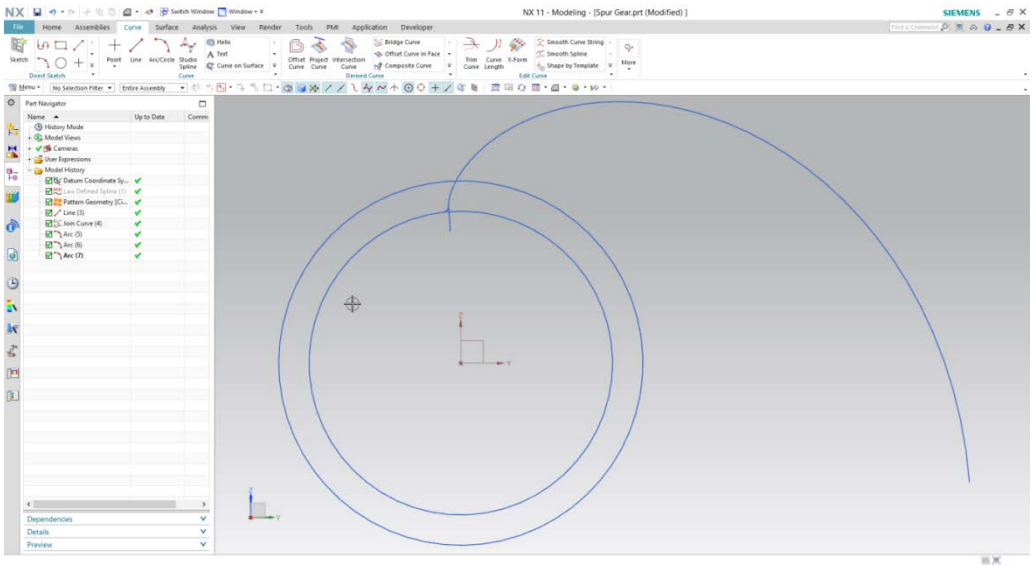

Step 8:

Trim the unnecessary parts of the curves.

Step 9:

Mirror the involute curve and the tangent circle.

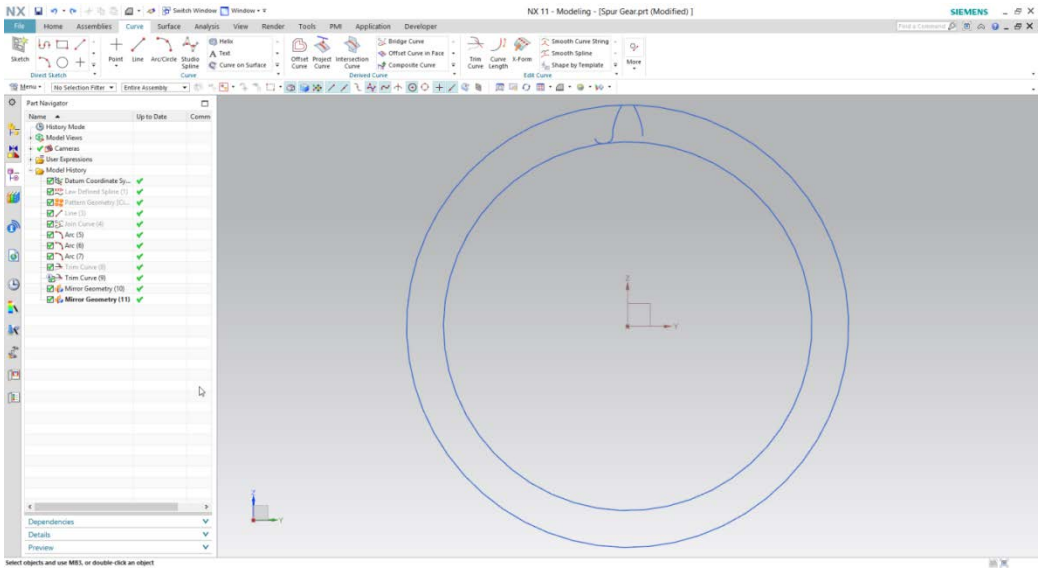

Step 10:

Trim the tip and root circles.

Step 11:

Create a circular pattern, set the parameters**.**

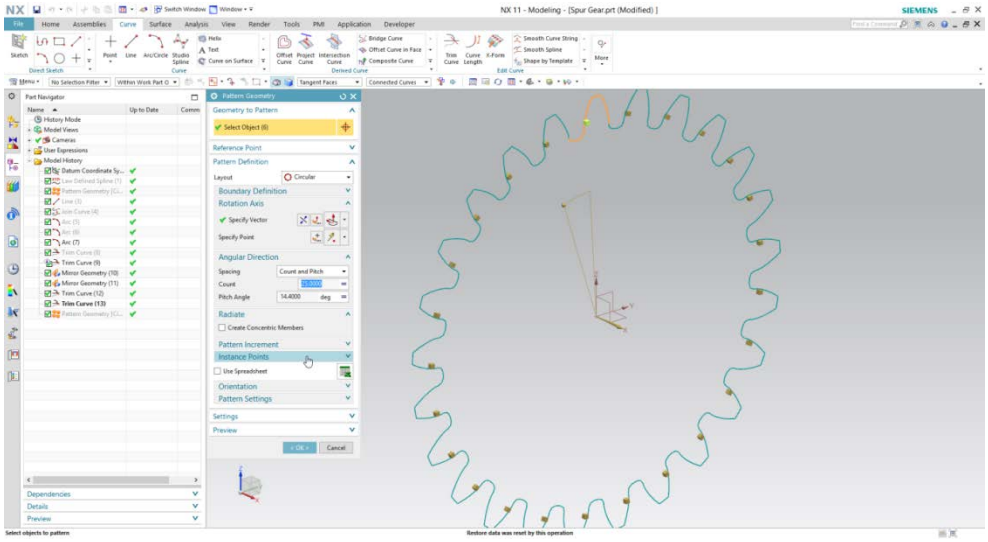

Step 12:

Extrude the curves to get the spur gear body.

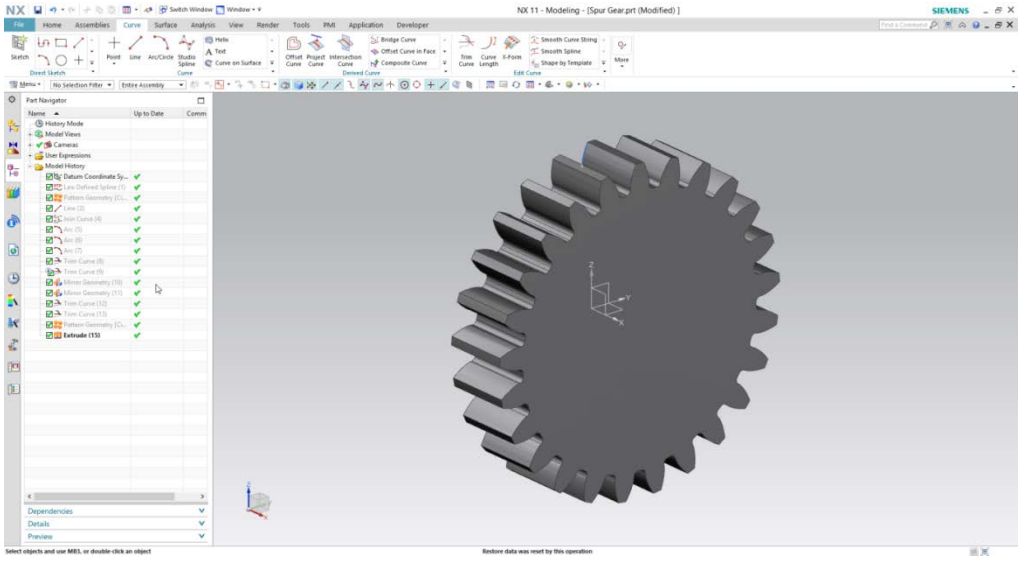

C. ANALYSIS: The maximum force acting on teeth of input pinion was calculated manually, which is as follows

> (Maximum Torque on input shaft) = (PCD of input gear)*(maximum Force)/2

> (Maximum Force) =2*(Maximum Torque on input shaft)/ (PCD of input gear)

> (Maximum Force) = [2*(5.1438E5)/ (25)] N

> (Maximum Force) =41150.4N

> (Maximum Force) =41.15KN

The stress variation was within the limits.

IV. MANUFACTURING

The gear box designed was manufactured which is strong enough to bear all kinds of loads and can last for years. The manufacturing phase consists of material selection, turning and facing on lathes, hobbing for gears, polishing and grinding, spline cutting and key slotting, sand casting for gear box casing and CNC milling for gear box casing. The last step of manufacturing is assembly which is done according to the design.

- Gear material selection and gear cutting:

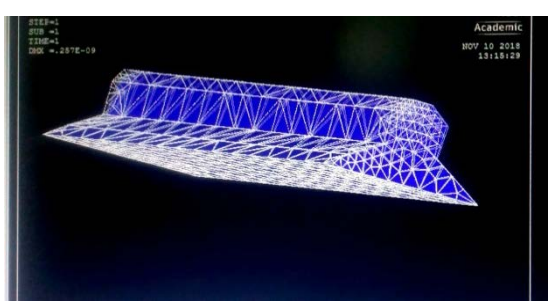

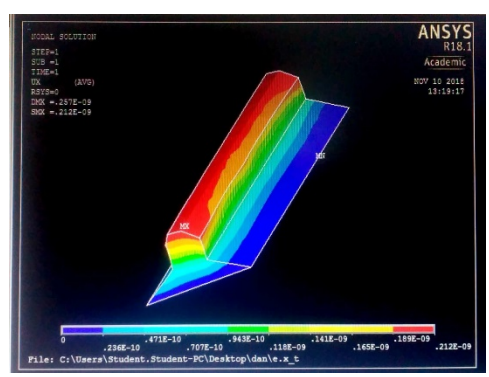

- Casting of gear casing:

- Spline cutting and drilling:

- Bearing assembly:

- Final assembly:

V. RESULTS

Based on the above calculations the design of gears were done and the results are drafted below

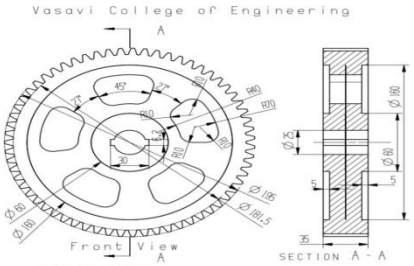

shaft hole

hole dia	25
no. keys	2
key height	5
key width	6.25
key length	40

intermediate gear

MODULE	3
No Of Teeth	63
Face Width	35
Pressure Angle	20
Pitch Diameter	189
Tip Diameter	195
Root Diameter	181.5
Tip Circle Pr.Angle	24.3867□
Ref Circle Tip	4.712389
Tip Thickness	2.364444
pitch	9.424778
Base pitch	8.856394
Fillet Radius	0.75
Base Diameter	177.6019
Addendum	3
Dedendum	3.75

All Dimensions are in mm

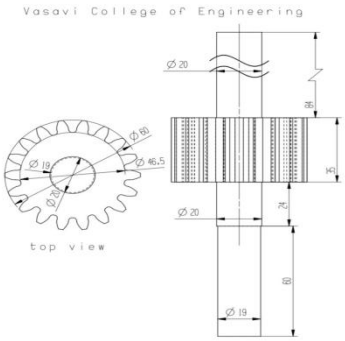

input shaft and pinion

MODULE	3
No Of Teeth	18
Face Width	35
Pressure Angle	20
Pitch Diameter	157.5
Tip Diameter	162.5
Root Diameter	151.25
Tip Circle Pr.Angle	24.3867□
Ref Circle Tip	3.92699
Tip Thickness	1.97037
pitch	7.85398
Base pitch	7.38033
Fillet Radius	0.625
Base Diameter	148.00156
Addendum	2.500
Dedendum	3.125

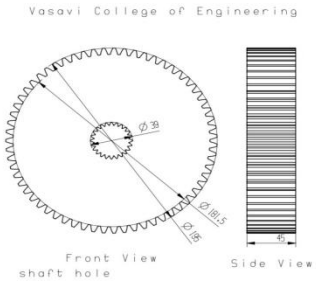

shaft hole

module	1.5
no.teeth	24
pressure angle	30
pitch diameter	36
base diameter	31.176915

SPUR GEAR I

MODULE	3
No Of Teeth	63
Face Width	45
Pressure Angle	20
Pitch Diameter	189
Tip Diameter	195
Root Diameter	181.5
Tip Circle Pr.Angle	24.3867□
Ref Circle Tip	4.712389
Tip Thickness	2.364444
pitch	9.424778
Base pitch	8.856394
Fillet Radius	0.75
Base Diameter	177.6019
Addendum	3
Dedendum	3.75

All Dimensions are in mm

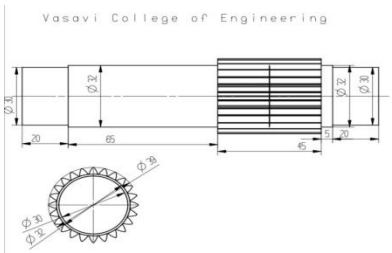

spline

MODULE	1.5
No Of Teeth	24
Face Width	45
Pressure Angle	30
Pitch Diameter	36
Tip Diameter	39
Root Diameter	32.25
Tip Circle Pr.Angle	36.926386
Ref Circle Tip	2.356194
Tip Thickness	2.364444
pitch	4.712389
Base pitch	4.081049
Fillet Radius	0.375
Base Diameter	31.176915
Addendum	1.5
Dedendum	1.875

All Dimensions are in mm

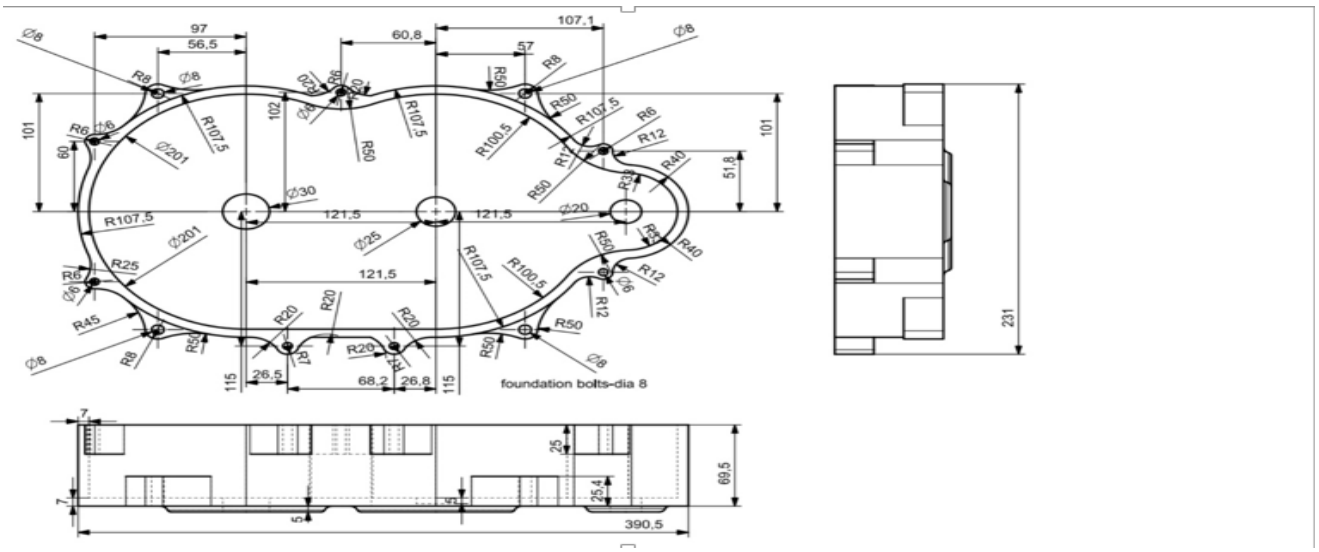

(Left gear casing)

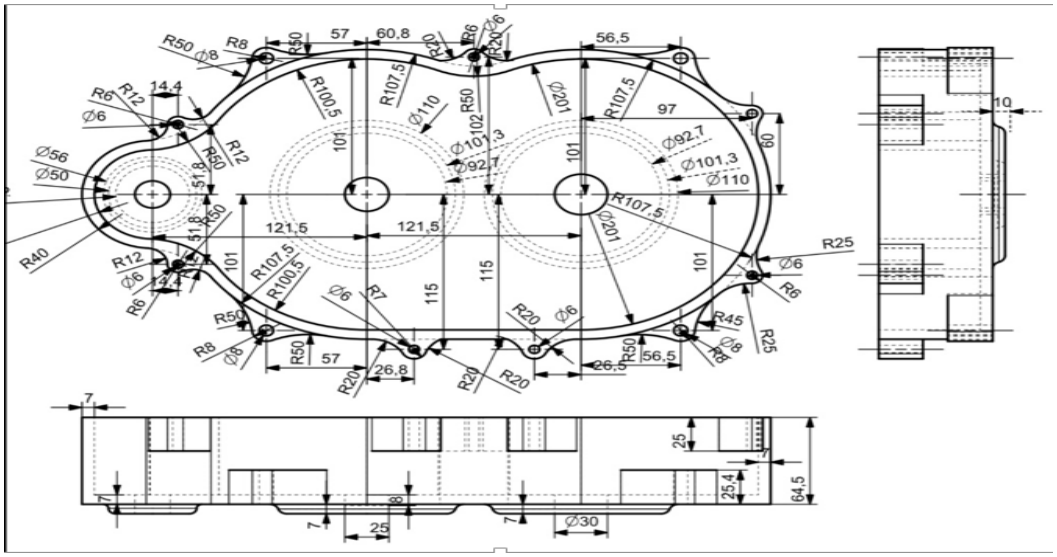

(Right gear casing)

VI. CONCLUSION

The manufacturing process was optimized for better finish of the gears. Use of advanced machinery reduced errors and tolerances. Casting of gear casing made the gear box cost effective. Not much machining was done for the gear casing. The module was decreased to 3 to improve strength and reduce the size. The gears are more compact and can give better performance when compared to 12:1 ratio gear box. Aluminum was used for gear casing, thus making it lighter in weight. Splines are used instead of keyways to mate gear and shaft, thus the locking of gear and shaft are perfect and there is no chance of gear slipping off the shaft. Roller bearings are used over sliding bearings to effectively transmit power to the wheels. Lubrication levels were increased for better heat dissipation from the gears. The gears are extrusion cut around the bore to make them lighter in weight and to decrease inertia forces. The gear teeth are designed to take a maximum load of 41.15KN.

ACKNOWLEDGMENT

This research paper was developed out of series of experiments, under the guidance of professors at Vasavi College of engineering, and we are grateful to the department of mechanical engineering for all the support they have provided. We would like to add a special note of thanks to J Anjaneyulu for his assistance in the design phase and Mr. Praneeth for his assistance in manufacturing.

REFERENCES

[1] Lindell, G. D., Breuer, D. J., and Herring. D. H., "Selecting the Best Carburizing Method for the Heat Treatment of Gears," American Gear Manufacturers Association Technical Paper No. 02FTM7, October 2002.

[2] M.F. Spotts, "Design of Machine Elements", 7th ed., Pearson Edu, 2003

[3] V.B Bhandari, "Machine Design", Tata McGraw-Hill Publications, 2010

[4] P.C Sharma and D.K Aggarwal, "Machine Design", 10th ed., S.K.Kataria and sons, 2003

[5] J.E. Shigley, C.R. Mischke, RGBudynas "Mechanical Engineering Design", 6th ed., Tata McGraw-Hill Publications, 2003

AUTHORS

First Author – A. Aditya Raj Gokul, BE (Mechanical Engineering), Vasavi college of Engineering- Hyderabad, adityarajgokul95@gmail.com

Second Author – A Surya Praneeth, BE (Mechanical Engineering), Vasavi college of Engineering- Hyderabad, asuryapraneeth@gmail.com.

Third Author – Nishant Jajoo, BE(Mechanical Engineering), Vasavi college of engineering- Hyderabad, nishantjajoo1401@gmail.com.

Fourth Author – P Rohanth Reddy, BE(Mechanical Engineering), Vasavi college of engineering- Hyderabad, rohanthreddypabbathi@gmail.com .

Fifth Author – D Rohan, BE(Mechanical Engineering), Vasavi college of engineering- Hyderabad, rohandhawlagar7998@gmail.com.

Correspondence Author – A Chandrasourabh, BE(Mechanical Engineering), Vasavi college of engineering- Hyderabad, mechandu.s@gmail.com.

Respected sir/madam,

Please find the attachment of our proposed research paper "Design, Analysis and Fabrication of Compound Gear Box" for review. Hoping for a positive response.

Thanking you,

Aditya.