Closed loop traffic signal controller

Reshmi Banerjee

Electrical Engineering Department, Guru Nanak Institute of Technology

Abstract- In our daily life traffic signal controller plays a vital role in channeling the vehicles from one corner of the city to the other. This system not only maintains a systematic approach in terms of "vehicle management" but also reduces accidents and rushes in peak hours. The disadvantage of open loop system is poor "time management". So the poor time management of open loop system is rectified by closed loop system, keeping in mind both efficiency and cost of the system.

Index Terms- Closed loop system, Open loop, Time management, Traffic signal controller.

I. Introduction

In today's world time is very - very important and often in open loop system we lose much of our precious time. Suppose a road is programmed to be open for 1 minute and it is seen that after the initial passing of vehicles for 10 seconds there is no other vehicle within 20 meters mark. As a result of which when the next vehicle comes, we have already lost important time.

Benefits of traffic signal controller : i) Increasing the traffic handling capacity of roads. ii) Reducing collisions, both vehicular and pedestrian. Encourages travel within the speed limit to meet green lights. iii) Reducing unnecessary stopping and starting of traffic – this in turn reduces fuel consumption, air pollution, noise and vehicle wear and tear. iv) Improve journey time. v) Reducing driver frustration and 'road rage'.

The IC555 timer in astable mode is used here for developing the 60 seconds and 8 seconds delay. The basic block diagram is given below:

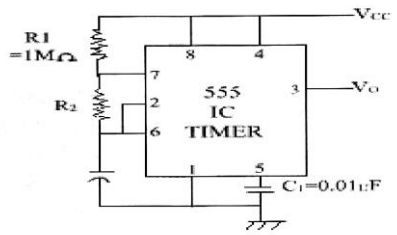

LDR depends for its operation on the inner photoelectric effect. The incident light controls the reverse current of a photodiode.

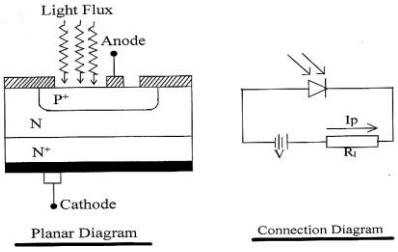

The laser receiver consists of a darlington pair,a LDR,a variable resistance and a fixed resistance.

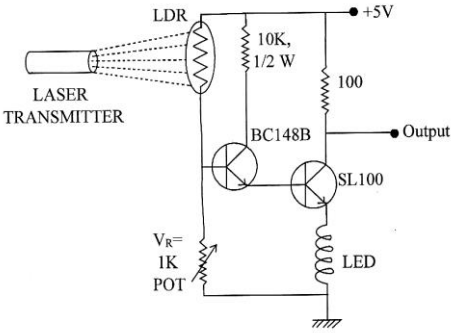

Research Elaborations – The basic idea behind closed loop system is efficient time management in addition to good vehicle management. In open loop system there was no feedback for determining the density of vehicle; this major drawback is eliminated in design of closed loop system.

Here the control mechanism will open a specific sequence of road for suppose t1 time. Within this t1 time we will be receiving a signal from the road depending on vehicle density. Whenever the density is low / nil and the signal is fed back to the controller for a time t2 (t2 < < t1), it will automatically change to the next sequence of traffic control. Thus efficient time management is achieved by closed loop system.

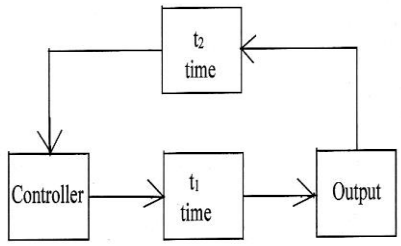

We are using laser mechanism for presence / absence of vehicle at the junction of roads. The following figure will simplify the idea :

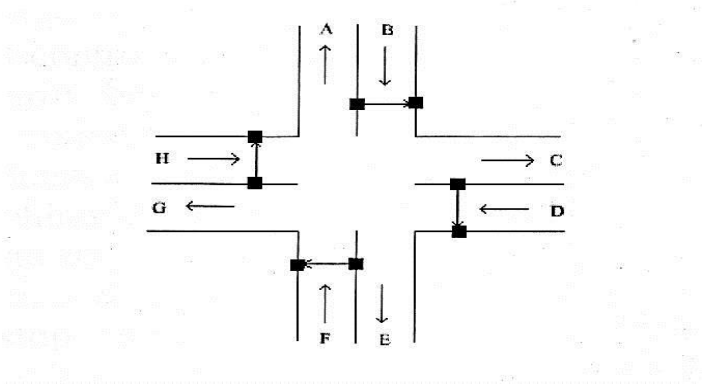

Here only four lanes B, D, F and H are responsible for release of vehicles, so we are placing laser mechanism at the head of each lane. Whenever there is a car at the head of these lanes, the laser beam will be obstructed and digitally this is 0. Whenever the laser beam falls on the receiver it is 1 giving the idea that the immediate vehicle is behind the laser mechanism.

Then the problem arises, how to determine the density of road? Since when laser receiver is 1 it implies the immediate vehicle is behind the laser mechanism but the next problem is the distance between laser and immediate vehicle. For this we are using a delay, by that it is determined that the density on a road is high or low.

We are using the real time setting for the traffic signal controller. So whenever a road sequence starts it will primarily be opened for 1 minute (60 seconds). Again in order to determine the low density of a road we apply the idea that whenever the laser receiver is 1 and the immediate vehicle is behind 20 meters mark from the laser a second delay will complete its time period and eventually resets the first delay (60 seconds) and changes on to the next sequence. This action will stop the vehicle behind 20 meters mark from crossing the laser. We have seen practically that a vehicle crossing a four way junction of roads always keep the speedometer at 10 km per hour. So to cross a 20 meters mark a car requires round about 8 seconds. If we set the second delay at 8 seconds so that it can automatically stop the vehicles, which are behind the 20 meters mark.

Both the delays of 60 seconds and 8 seconds will work synchronously and each of them can change the sequence of roads whenever their cycle is completed. The general flow of traffic in all possible direction are shown below :

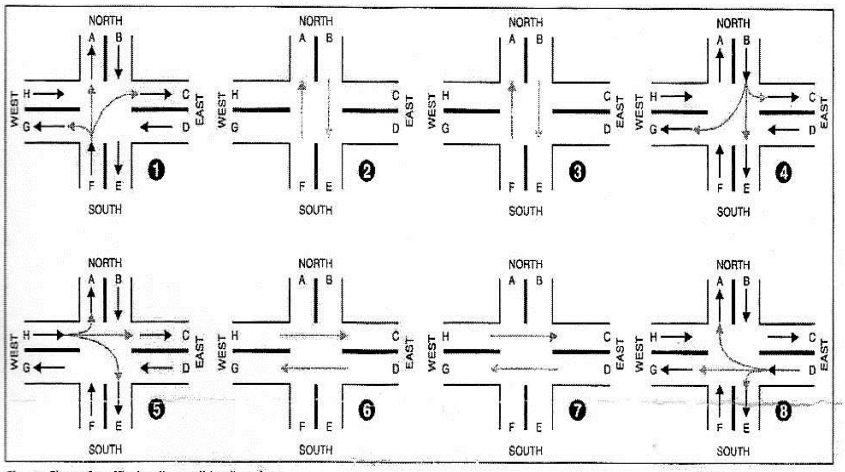

Fig. 1: Flow of traffic in all possible directions

For figure 1, 4, 5 and 8 the working of both the delays will follow the following chart :

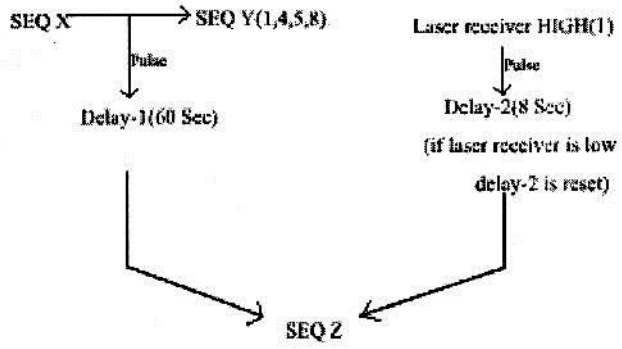

For figure 2, 3, 6 and 7 as both roads are working simultaneously then the transition of sequence will occur if delay – 1 (60 seconds) has completed its cycle or delay – 2 (8 seconds) of both the roads have completed their cycles.

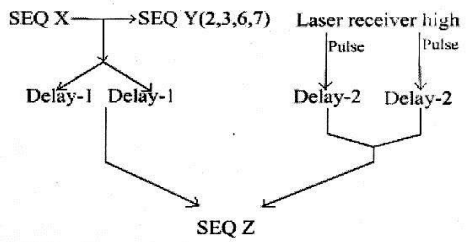

Here we are designing two delays (60 seconds and 8 seconds) with IC555 and couple it to the 3 – bit binary counter. But here a problem arises, how we are going to synchronize the delays? As for road sequence 1, 4, 5 and 8 both the delays are ORed i.e. whenever one delay completes its time period the 3-bit counter changes to the next state but when the road sequence 2, 3, 6 and 7 are in operation both the 8 seconds delays of two roads are ANDed i.e. they can change the sequence only when density of vehicle in both roads are low; the ANDed operation in finally ORed to the 60 seconds delay. Simply we can show :

SEQUENCE = > [DELAY – 1] OR [DELAY – 2]
(I,4,5,8)

SEQUENCE = > [DELAY – 1] OR [DELAY – 2 AND DELAY – 2]
(2,3,6,7)

Here two delay – 2 are represented for road B and F (sequence 2,3) and D and H (sequence 6, 7).

For convenient operation we are ANDing the output of laser receiver of path B & F and also of path D & H. Again we are ANDing both the outputs of the previous two AND gates and the output of the 3rd AND gate is given to 8 seconds delay at pin 4 (reset pin). From pin 3 (output terminal) we give one input to a OR gate and the same input is being given to 60 seconds delay at pin 4 to reset it. Likewise from pin 3 of 60 seconds delay we give input to the OR gate and the same being given to pin 4 of 8 seconds delay. Thus 8 seconds delay will be reset whenever 60 seconds delay completes. The output of the OR gate is given to a 3 – bit binary counter which generates 8 states and works on the same principle as of a open loop system. For closed loop system both 8 seconds and 60 seconds delays are important, as whenever one completes its time period we will go to the next sequence. Both delays are reset the other one for a smooth operation. Here one important fact is that the 8 seconds delay forcefully changes the sequence when we are in a 60 seconds slot.

In laser operation for determining density of road one criterion to be fulfilled. The criterion is that when a certain road is closed, the first vehicle should stop behind the laser mechanism, which will be marked on the road. Thus, when a road is closed we will be “high” value from laser receiver and to AND gates. This satisfies the criteria that the road, which is open, can only trigger the 8 seconds delay when the laser receiver is “high” i.e. no vehicle.

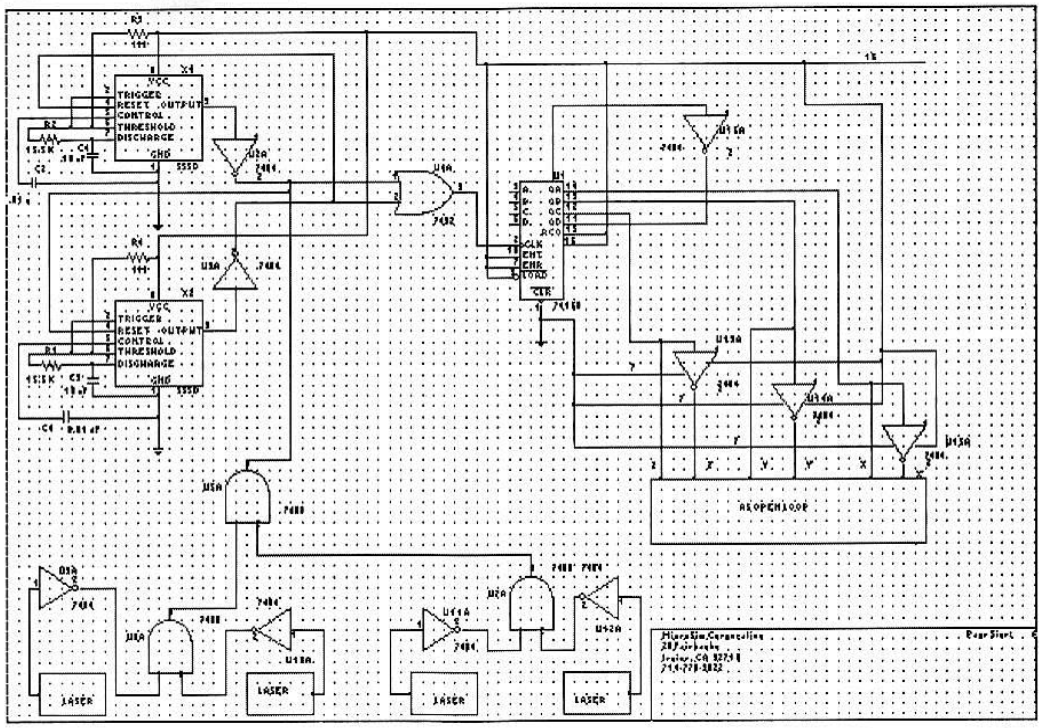

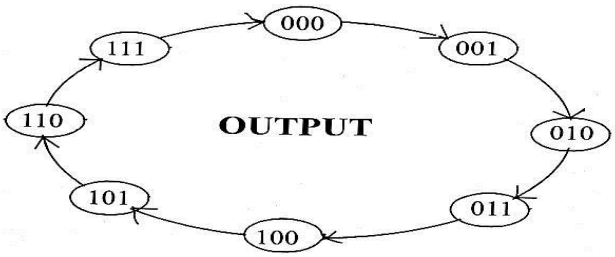

The laser circuit is giving a high output when laser falls on to the LDR whereas the output is low if the laser is obstructed. In the first case vehicle is absent whereas vehicle is present in the second case. Now for synchronizing the two delays we are considering three cases :

i) **60 second is on, 8 second is off, 60 second changes the state :** 8 second is only off, when vehicle is present in between laser transmitter and laser receiver i.e. the laser output terminal is low. So the 3 input AND gate output terminal is low, making 8 seconds delay off. But the NOT gate at 8 seconds output terminal will be giving high output and for that reason we are giving the input terminal of pin 4 of 8 seconds delay to pin 14 of NOT gate. This will make the IC7404 to be at ground potential and gives low output, which is fed back to XOR gate and then given to pin 4 of 60 seconds delay. This will help the 60 seconds delay to remain ON and changes the state after its time period.

ii) **60 second is on,8 second starts and stops within 8 second,60 second changes the state:** Here the 3-input AND gate output terminal is high and starts the 8 second delay and thus the NOT gate is getting its required +V(CC).But still the output terminal of NOT gate is low and within 8 second slot the delay stops(due to presence of vehicle).Thus the NOT gate is at ground potential and still its output is low. Thus 60 second delay is ON and changes the state.

iii) **60 second is on,8 second starts and completes,8 second changes the state:** If 8 second delay completes its time period the output of NOT gate is high, thus the 60 second delay is reset as both XOR input terminals are high. The 8 second delay changes the state. This sequence only proves that the density of road is low and there is no vehicle within 20 meters mark.

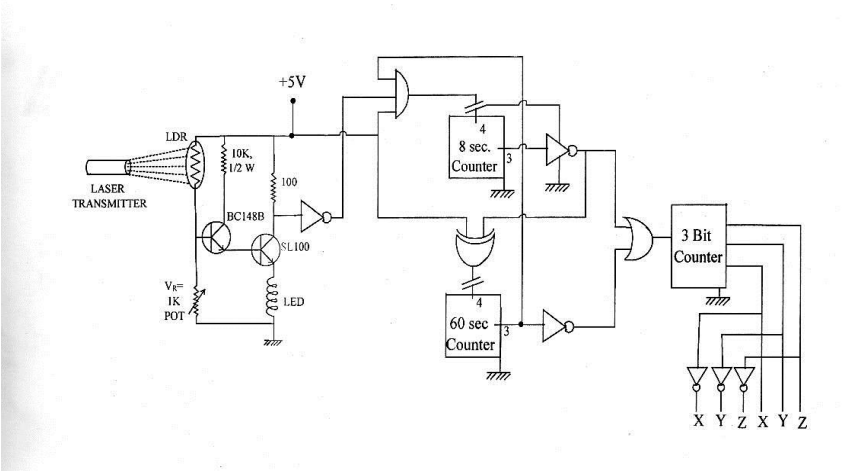

Fig. 3 : Operation of 3 – bit binary counter

For giving practical low and high values to pin 4 of both delays relays have been used, which are operated by a transistor. The relay operated as a NOT gate.

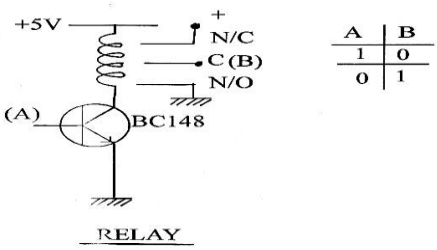

A	B
1	0
0	1

Whenever a particular sequence (overall 8 sequence) of road opens, the 60 seconds delay starts on its own. If traffic density is high it will continue its time period upto 60 seconds and then gives a pulse to the 3-bit binary counter to change its state.

The roads which are closed will give a “high” output to the ANDed input terminal and the road/roads which are open will give a “low” output if density of road is high. When density of road is low it will give a “high” output and thus the ANDed combination will only work then and starts the 8 seconds delay. The 8 seconds delay can be reset whenever the output of the specific road is “low”.

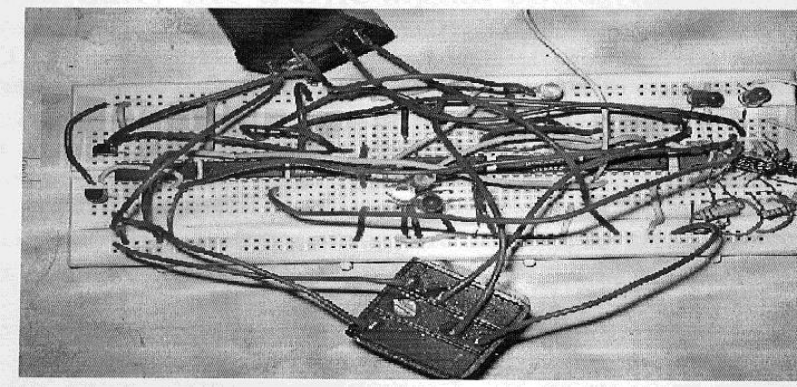

Fig. 4 : Model of the Project

For road sequence 2,3,6,7 both roads B & F and D & H will have to go through a dual checking of road density and only when both the laser output of the roads are “high”, then only 8 seconds delay will start.

8 seconds delay forcefully changes the 3-bit binary counter to change its state whenever the time period is complete.

Whether the 8 seconds or the 60 seconds delay has completed its time period it will change the 3-bit binary counter to next state and the same output will reset the other delay.

Both the delay output terminals are ORed and then given to the 3-bit binary counter.

The 3-bit binary counter works on the simultaneous states of signal as shown in table I,which are generated by a gated logic as shown in fig. by the Boolean function of table II.

TABLE I
Simultaneous States of Signals for All the Traffic

X	Y	Z	B-C/B-G Lt/Rt	B-E St	D-E/D-A Lt/Rt	D-G St	F-G/F-C Lt/Rt	F-A St	H-A/H-E Lt/Rt	HC St	WALK (N-S)/(S-N)	WALK (E-W)/(W-E)
0	0	0	R	R	R	R	G	G	R	R	R	R
0	0	1	R	G	R	R	R	G	R	R	G	R
0	1	0	R	G	R	R	R	Y	R	R	G	R
0	1	1	G	Y	R	R	R	R	R	R	R	R
1	0	0	R	R	R	R	R	R	G	G	R	R
1	0	1	R	R	R	G	R	R	R	G	R	G
1	1	0	R	R	R	G	R	R	R	Y	R	G
1	1	1	R	R	G	Y	R	R	R	R	R	R

TABLE II
Boolean Functions for All the Signal Conditions

Signal	Reference	Boolean functions
Green	B-C(Lt)/B-G (Rt)	X'YZ
Green	B-E (St)	XYZ'+X'Y'Z
Red	B-E (St)	X+Y'Y'Z'
Yellow	B-E (St)	X'YZ
Green	D-E (Lt)/D-A (Rt)	XYZ
Green	D-G (St)	XYZ'+XY'Z
Red	D-G (St)	X'+XY'Z'
Yellow	D-G (St)	XYZ
Green	F-G(Lt)/F-C (Rt)	X'Y'Z'
Green	F-A (St)	X'Y'
Red	F-A (St)	X+X'YZ
Yellow	F-A (St)	X'YZ'
Green	H-A (Lt)/H-E (Rt)	XY'Z'
Green	H-C (St)	XY'
Red	H-C (St)	X'+XYZ
Yellow	H-C (St)	XYZ'
Green	Walk (N-S/S-N)	X'YZ'+X'Y'Z
Green	Walk (E-W/W-E)	XYZ'+XY'Z

Note. X', Y', and Z' denote complements of variables X, Y, and Z, respectively.

II. Conclusions

i) The system will never fail as there is a separate 60 seconds delay which only depends on the change of state of the 3-bit binary counter. So even if the laser mechanism or the 8 seconds delay fails to operate, the 60 seconds delay will continue to operate and thus the closed loop system converts into an open loop system and reduces all chances of accidents.

ii) Here we only apply one special condition in the road. From head of a road there will be zebra crossing, then the laser mechanism and finally the vehicle stopping mark. The three should not collide with each other.

iii) The above condition can hold good at all times when we are implanting two traffic police at the junction of the roads. Also fencing at the side of the roads is necessary upto the laser mechanism.

References

[1] I.J. Nagrath, "Control Systems Engineering", New Age International.
[2] S. Hasan Saeed, "Control Systems", SK Kataria & Sons.
[3] Forrest M. Mims iii, "Timer,Op Amp & Optoelectronic Circuits & Projects", Master Publishing Inc.
[4] Anil K. Maini, "Digital Electronics:Principles,Devices and Applications", Wiley.
[5] Nair B. Somanathan, "Digital Electronics and Logic Design", PHI.
[6] Anand Kumar, "Fundamentals of Digital Circuits", PHI.

Authors

First Author – Reshmi Banerjee, M.Tech., Guru Nanak Institute of Technology, e-mail : banerjee.reshmi@gmail.com, Alternate e-mail : reshmi26@rediffmail.com, Contract No. 09830319497.