A Monograph on Fuzzy Logic Control for Improving Transient and Dynamic Stability of Power Systems

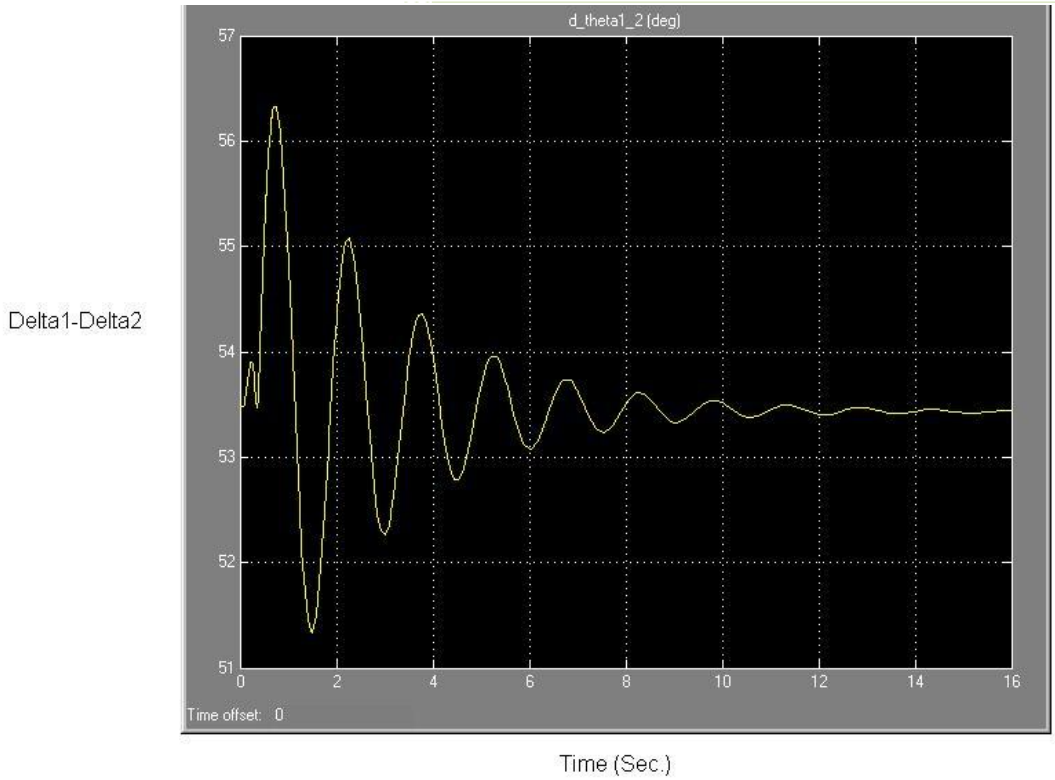

Authored by:
Sanjeev S. Gokhale

Publication Partner: IJSRP INC.

Publication Partner:
International Journal of Scientific and Research Publications (ISSN: 2250-3153)

A Monograph on Fuzzy Logic Control for Improving Transient and Dynamic Stability of Power Systems

Sanjeev. S. Gokhale

Publishing Partner:
IJSRP Inc.
www.ijsrp.org

ISSN 2250-3153
9 772250 315302

Publication Partner:
International Journal of Scientific and Research Publications (ISSN: 2250-3153)

Preface

Power systems are often subject to stability problems. Faults and load changes give rise to oscillations in power system networks that result in poor power quality. The transient stability of an electric power system can be improved by a switched series capacitance. Progress in the field of power electronics has led to the widespread use of thyristor switches that can be used to switch on and off series capacitors and reactances. If the reactance of a transmission line is controlled for a small duration immediately after the occurrence of a fault or a load change the electromechanical oscillations can be damped and the system stability improved. Attempts have been made to use optimal control theory to damp these oscillations in minimum time. As per optimal control theory, Three to four switchings of the correct reactance for the correct time can restore the system to the prefault state in minimum time. However, optimal control theory has many practical drawbacks.

Fuzzy logic is the most successful and popular branch of Artificial Intelligence. Fuzzy logic controllers are used whenever the system models are not well defined and there are inbuilt uncertainties and approximations in the process. Attempts have been made to construct artificial intelligent controllers to improve power system stability. This monograph simulates, control of a simple power system with a fuzzy logic controller. A set of fuzzy control rules is constructed and inference is provided by fuzzy logic reasoning. This monograph, shows that the electromechanical oscillations arising after a fault can be successfully damped and the system stability enhanced by the use of a fuzzy controller.

I express my sincere thanks to all those who gave me guidance, suggestions and encouragement which helped me complete the monograph.

Publication Partner:

International Journal of Scientific and Research Publications (ISSN: 2250-3153)

Copyright and Trademarks

Publication Partner:
International Journal of Scientific and Research Publications (ISSN: 2250-3153)

Authors

Dr. Sanjeev S. Gokhale
Associate Professor
Department of Electrical Engineering
Yeshwantrao Chavan College of Engineering
Nagpur -441110

Publication Partner:
International Journal of Scientific and Research Publications (ISSN: 2250-3153)

Table of Contents

1. . INTRODUCTION

Power systems transmitting large amounts of power over large distances are often subject to stability problems. Transient faults and load changes give rise to oscillations in power system networks that result in poor power quality. Kimbark has shown that the transient stability of an electric power system can be improved by a switched series capacitance Progress in the field of power electronics has led to the widespread use of thyristor switches that can be used to switch on and off series capacitors (and reactances). If the reactance of a transmission line is controlled for a small duration immediately after the occurrence of a fault or a load change the electromechanical oscillations can be damped and the system stability improved.

Attempts have been made to use optimal control theory to damp these oscillations in minimum time. As per optimal control theory, Three to Four switchings of the correct reactance for the correct time can restore the system to the prefault state in minimum time. However, optimal control theory has many practical drawbacks. For example analytical solutions are limited to a few simple models. Also numerical solutions require large computational efforts and are presently limited to a certain class of problems. So optimal control theory has not been implemented practically till date.

Fuzzy logic is the most successful and popular branch of Artificial Intelligence that has been put to use in the industry. Fuzzy logic controllers are used whenever the system models are not well defined and there are inbuilt uncertainties and approximations in the process. Attempts have been made to construct artificial intelligent controllers to improve power system stability. This project simulates, control of a simple power system with a fuzzy logic controller. A set of fuzzy control rules is constructed and inference is provided by fuzzy logic reasoning. This project, attempts to show that the electromechanical oscillations arising after a fault can be successfully damped and the system stability enhanced by the use of a fuzzy controller. This will also improve the power quality of the supply.

2- Dynamics of A Simple power system

2.1 Simple power system Dynamics

Fig.2.1 shows a single machine connected to an infinite bus. The classical model is assumed.

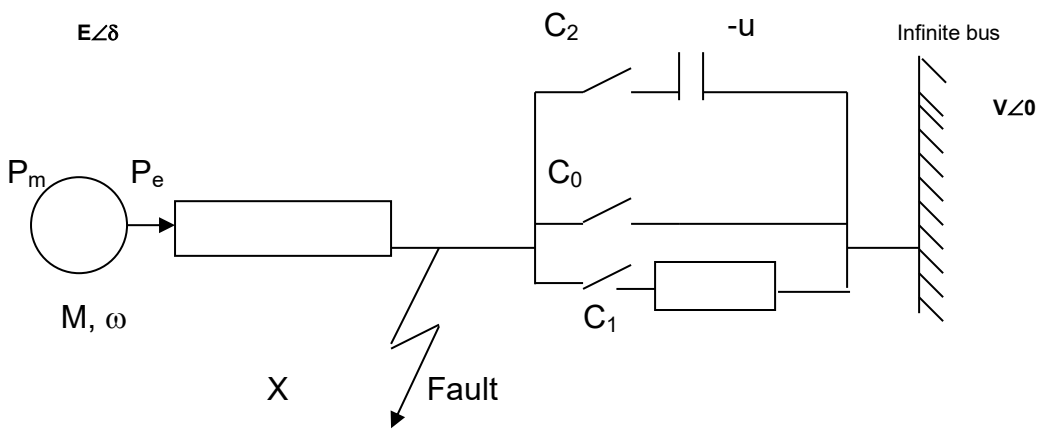

Figure 2.1 Single alternator connected to an infinite bus

The voltage behind the transient reactance X of the machine is E. The voltage at the infinite bus is V∠0. A control reactance +u or –u can be connected in between, which depends on the position of the switches. (Only one switch is closed at a time).

+u = Inductive reactance

-u = Capacitance

Assuming a salient pole machine the power transferred by the machine to the infinite bus is

$$P_e = \frac{E.V\sin(\delta)}{X} \tag{2.1}$$

Where δ is the machine angle or the power angle. (As infinite bus angle is taken to be reference (0) power, angle is same as machine angle),ω is the machine speed.

The dynamics of the system is given by the equations

$$\omega = \frac{d\delta}{dt} \tag{2.2}$$

$$\frac{d\omega}{dt} = \frac{1}{M}\frac{P_m - E.V\sin(\delta)}{X+u} - D\omega \tag{2.3}$$

Where D is the damping constant.

2.2 Transient Stability

In transient stability the machine is subjected to a large impact, usually a fault, which is maintained for a short time and causes a significant reduction in the machine terminal voltage and the ability to transfer synchronizing power. If we consider the one machine infinite bus problem, the usual approximation for the power transfer is given by equation 2.1.which shows that if the terminal voltage V is reduced the electrical power transferred to the infinite bus P will also be reduced by the same amount. This causes the rotor to accelerate and swing. Prevention of this reduction in P requires very fast action by the excitation system in forcing the field to ceiling and thereby holding V to a reasonable value.

The opening of the generator main circuit breaker is done only under extreme conditions as, along with that the following must be done:

Steam supply to the turbine should be stopped or bypassed.

Firing of the boiler should be stopped.

Coal mills are to be stopped.

Coal supply to the coal mills has to be stopped.

Field circuit of the alternator has to be interrupted.

Field coils are connected across a resistor to dissipate the stored energy.

Alternator has to be kept running at a slow speed, few r.p.m. (Called barring) with the help of barring gear till it cools down uniformly, so as to avoid uneven expansions.

Putting back the alternator on line is rather a slow process because all the parameters (temperatures and pressures) have to be progressively built up to avoid thermal shock resulting in uneven expansions which might cause unacceptable vibrations. Therefore unscheduled outage of a thermal power station is avoided as far as possible.

2.3 Dynamic Stability

Dynamic stability means the ability of the machine to adjust to small load changes or impacts

2.4 Optimal Control of a Single machine connected to infinite bus

Our aim is to minimize (zero) in the above problem the machine swing that occurs after a fault, in minimum time. This is a problem of optimal control and Pontryagin's maximum principle can be used.

The phase trajectories of the system can be constructed by solving the above differential equations (1) and (2) with the initial states δ(0) and ω(0). Two families of trajectories are obtained corresponding to the reactance's U^{+}= X+u and U^{-} =X-u. These trajectories are shown in Figure 2.2.

O ($\delta_{0,}$ ω_0) is the desired operating point (same as the prefault point). Segments OA and OB form the switching curve. An optimal trajectory terminates on one of them. Above the switching curve the optimal control is u_{opt} =U- and below, it is u_{opt} =U+.

When no control reactance is there in the system and the machine is operating at －a constant δ and

with ω= $\frac{d\delta}{dt}$ =0 (i.e. prefault condition) the operating point is at 'O'. When a fault occurs and persists for time t, δ and ω change to a new value say point F. Now if the fault is removed and at that instant a capacitance (u-) is connected, the phase trajectory is one of the circles shown (U-). Now when (δ,ω) reach the point A (i.e. have touched the

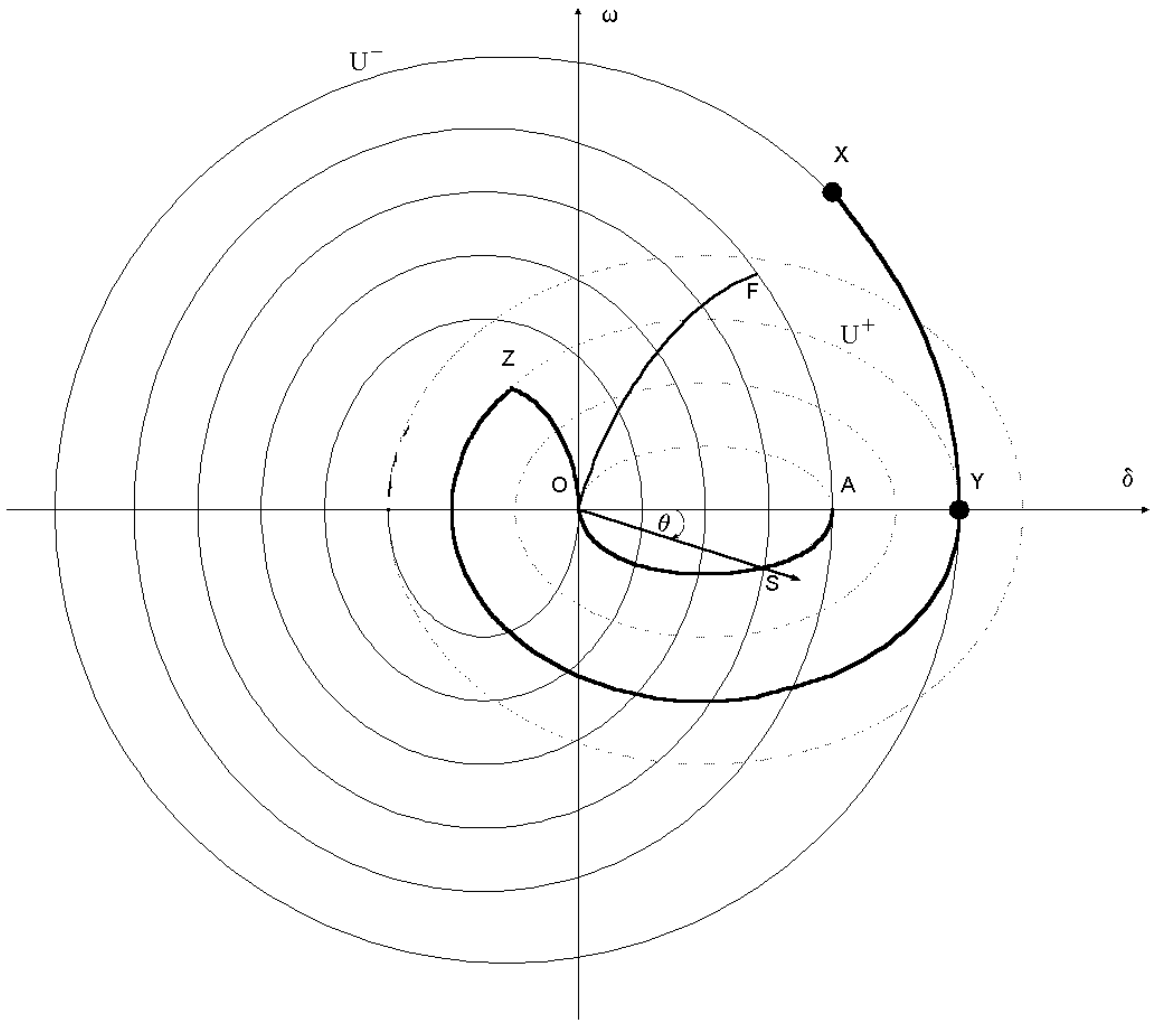

Figure .2.2. Phase plane Plot (δ Vs ω)

switching curve at A) if the capacitor is removed and an inductor is connected (u+) the system will move along one of the ellipses. Now if the inductance is removed at the exact instant when (δ,ω) reach the point O, then this means that the system has been brought to the prefault operating condition in minimum time.

This time optimal control consists of maintaining the system reactance at its boundary (X+u) or (X-u) during appropriate time intervals and is thus of bang-bang type.

The point O can always be reached in two switchings, if the fault is less severe than F. The second switching always takes place along either AO or BO. However, if the fault is more severe than F say point X then a third switching will be required (XYZO –from capacitor to inductor and then to a new capacitor).

The lengths OA and OB depend on the control reactances.

For severe faults switching from capacitor to inductor occurs near 360º (point A) .For small faults switching occurs near 270º.

Based on these observations a set of control rules can be developed.

Neglecting the damping D, the equation of the switching curve is (Kosterev),

$$\frac{M\omega^2(t)}{2} = \frac{M\omega_0^2(t)}{2} + \int_{\delta_0}^{\delta(t)} (P_m(t) - \frac{U_1(t)U_2(t)}{X_1 - X_\sigma}\sin\sigma)d\sigma \qquad (2.4)$$

Where,

$$\delta(t) = \delta_0 + \int_{t0}^{t} \omega(\xi)d\xi \qquad (2.5)$$

Engineers at the Western North American interconnection have found mechanical single insertion of series capacitors, with manual bypass later very successful.

The permanent reactance of the line (line inductance +permanent series capacitance compensation) must be selected properly to provide sufficient transient and steady state stability margins in post fault steady state. The temporarily introduced reactance must be sufficiently large to ensure the first swing stability for the expected transients. The large compensation change from +u to –u, can create disturbances in the system. Also these large compensation changes may contribute to the shaft –turbine stresses (Sub synchronous Resonance phenomenon) Therefore, selection of the appropriate values is very important. However, the temporarily connected compensation may not contribute much to the

SSR as it is connected in the system for a very small time. In this report the temporarily connected compensation is taken at 40-50 % of total line reactance.

The optimal control policy to be applied to the swing equation with constant parameters is challenged by the dynamic uncertainty and the variety of transients, when applied for transient stabilization of the interconnected power systems. Optimal control theory has many practical drawbacks. Analytical solutions are limited to a few simple models. Also numerical solutions require large computational efforts and are presently limited to a certain class of problems. So optimal control theory has not been implemented practically till date. The optimal control approach might be most suitable as a prototype against which other methods can be compared. .

It is here, where we can apply fuzzy logic and use a fuzzy controller. Fuzzy logic controllers can be used wherever there is a need to consider uncertainties and approximations in the system model. When one cannot represent the controller mathematically or in other words when one cannot specify accurate dependencies between the control input and the state and output variables fuzzy logic controllers can be used. So to improve robustness with respect to un-modeled dynamics we use fuzzy logic, but we have to compromise on the controller time optimality.

3- Fuzzy Logic

3.1 Introduction to Fuzzy Logic

Many times human thinking and decisions are based on Yes /No reasoning. Many times the answer to a question is yes or no. In Boolean logic a particular object or variable is either a member of a given set (logic 1) or it is not a member of that set (logic 0). In electronics any voltage higher than 5 volts is termed high and its state is denoted by1, and any voltage lower than 5 volts is called low and its state is denoted by 0.This is a very rigid logic. The voltage 4.99 though being very close to high is still called low. The following statement shows Boolean logic imbibed in it.

IF it is not raining AND the outside temperature is less than 80º F THEN we will go for a picnic.

However, human thinking and decisions do not always follow crisp yes/no logic.

But it is often vague, qualitative, uncertain, imprecise or fuzzy in nature. In actual thinking 4.99 is as good as high and the above statement may be

IF weather is good AND the outside temperature is mild then we will go for a picnic.

Based on this aspect of human thinking, Lotfi Zadeh, a computer scientist at the University of California, Berkley originated the Fuzzy theory. Fuzzy logic was motivated by the need for a conceptual framework that could handle the inherent vagueness in the use of language, for the purpose of knowledge representation. It is an attempt to try to model a human brain mathematically, which does not deal with numbers but uses language. Any continuous nonlinear function can be approximated as exactly needed with a finite set of fuzzy variables, values and rules .In fuzzy set theory based on fuzzy logic a particular object has a degree of membership in a given set that may be anywhere in the region of 0 to 1. Fuzzy logic is therefore called multivalued logic as compared to Boolean logic.

Fuzzy logic is a class of Artificial intelligence. Although fuzzy logic deals with imprecise information, the information is processed in sound mathematical theory. A fuzzy logic problem is an input/output, static, nonlinear mapping problem.

3.2 Membership functions

A membership function is a curve that defines how the values of a variable in a certain region are mapped to a membership value μ (or degree of membership) between 0 and 1.In Boolean logic our definitions are very rigid.

In fig (3.1) shown below any temperature less than 55° is by definition strictly cold, any temperature between 55º and 75º is mild and temperatures above 75º are strictly hot. We can say that temperatures below 55º have a degree of membership ‘1’ in the cold set and ‘0’ in the mild and hot set. Similarly temperatures between 55º and 75º have a membership value ‘1’ in mild set and ‘0’ in cold and hot set.

The same applies for other temperatures. These definitions do not carry significance in Boolean logic. However, these definitions form the base of fuzzy logic.

In fuzzy logic the same range of temperatures can be defined as shown (Fig.3.2).

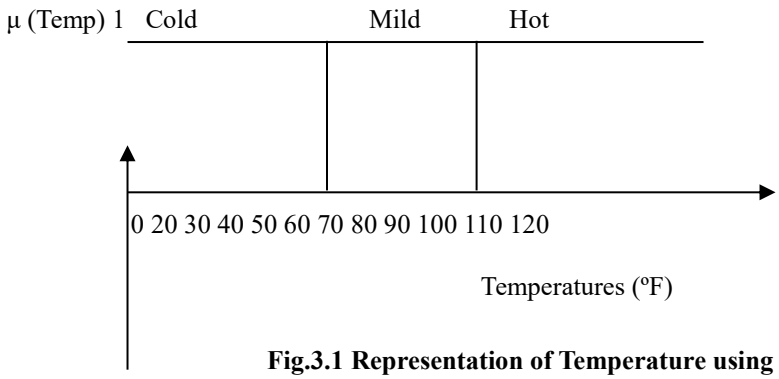

Fig.3.1 Representation of Temperature using Crisp Set

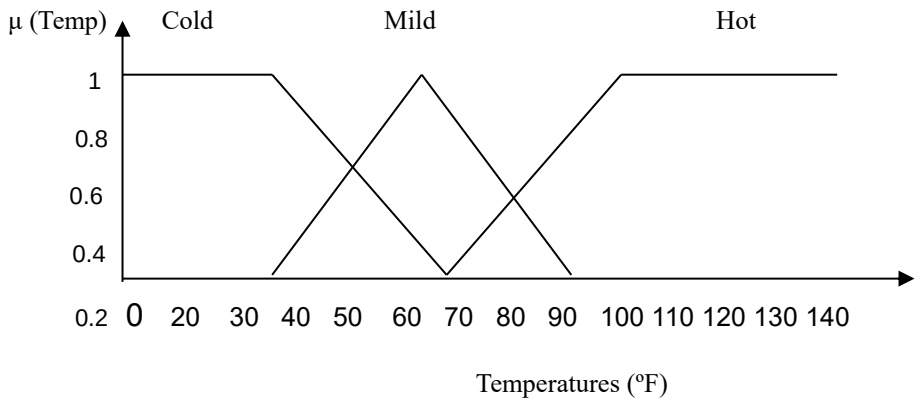

Fig.3.2 Representation of Temperature using Fuzzy Sets

The above figure shows that in the range of 70º to 90º a temperature is classified both as cold and mild. For example a temperature of 80º is 0.4 cold and 0.7 mild. So the degree of membership for temperature 80º in the set cold is 0.4

and in the set mild it is 0.7.Similarly in the range 90º to 105º a temperature is classified both as mild and hot. The range of the variable (in this example temperature) is called the universe of discourse (range).

Membership functions can have different shapes (Fig3.3). The most commonly used is the triangular membership function, which can be symmetrical or unsymmetrical in shape.

Other shapes are trapezoidal, Gaussian, Two sided Gaussian, Singleton, Generalized bell shape, Sigmoid and Polynomial types. They can be symmetric or asymmetric. . Apart from these, the user can generate arbitrary membership functions. In practice, one or two types of MF's are enough to solve most problems.

3.3 Principle of Extension

This is a fundamental principle of fuzzy logic. This principle helps to get a fuzzy model for a variable if we know the fuzzy model for another variable and the functional relationship between them .For example, we know that I=V/R. If we know how V is expressed as a fuzzy variable the extension principle helps in knowing us how to express I as a fuzzy variable (set). It gives us the rule of how to calculate an output of a fuzzy system. If we know the structure of the system, containing algebraic and logical blocks, and the system inputs are fuzzy, on the basis of this principle we can obtain the output of the system

Operation on fuzzy sets**:** The basic properties of Boolean logic are also valid for Fuzzy logic.

3.4 Fuzzy inference:

A fuzzy inference system consists of a formulation of the mapping from a given input set to an output set using fuzzy logic. This

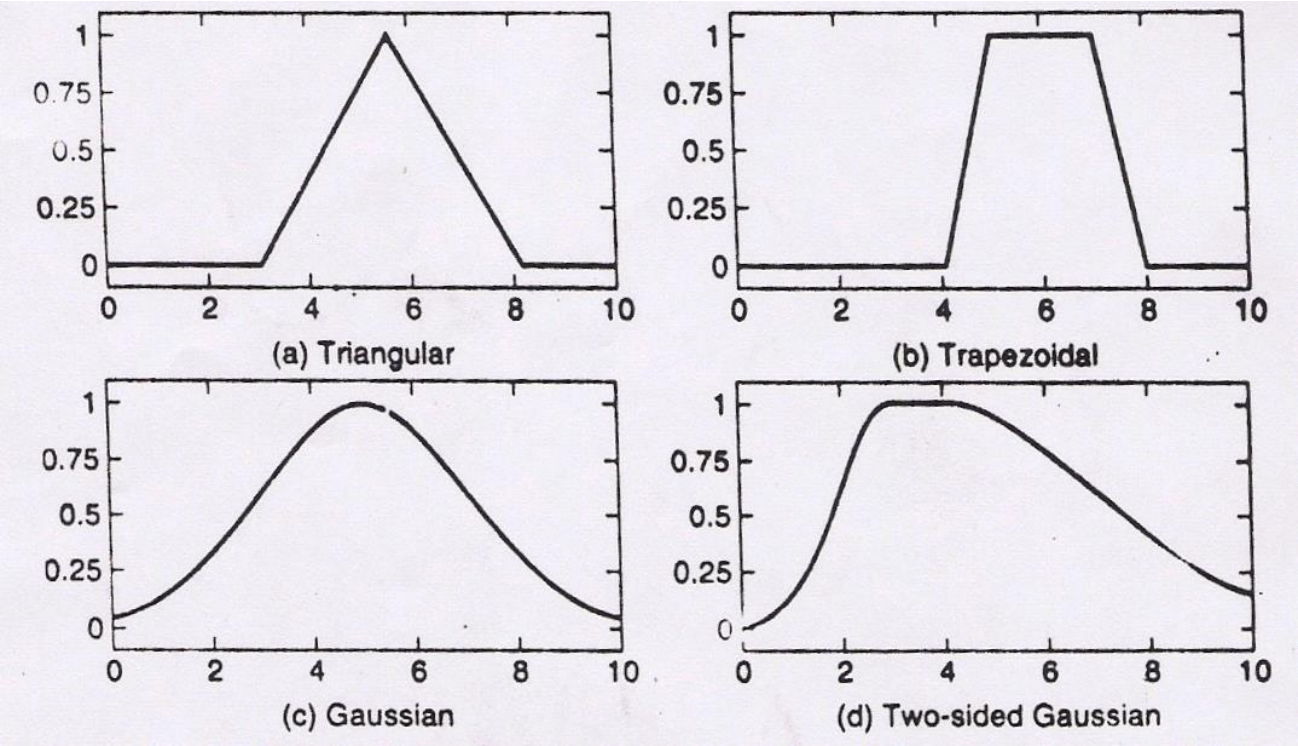
1
0.75
0.5
0.25
0
0 2 4 6 8 10
(a) Triangular
(b) Trapezoidal
(c) Gaussian
(d) Two-sided Gaussian

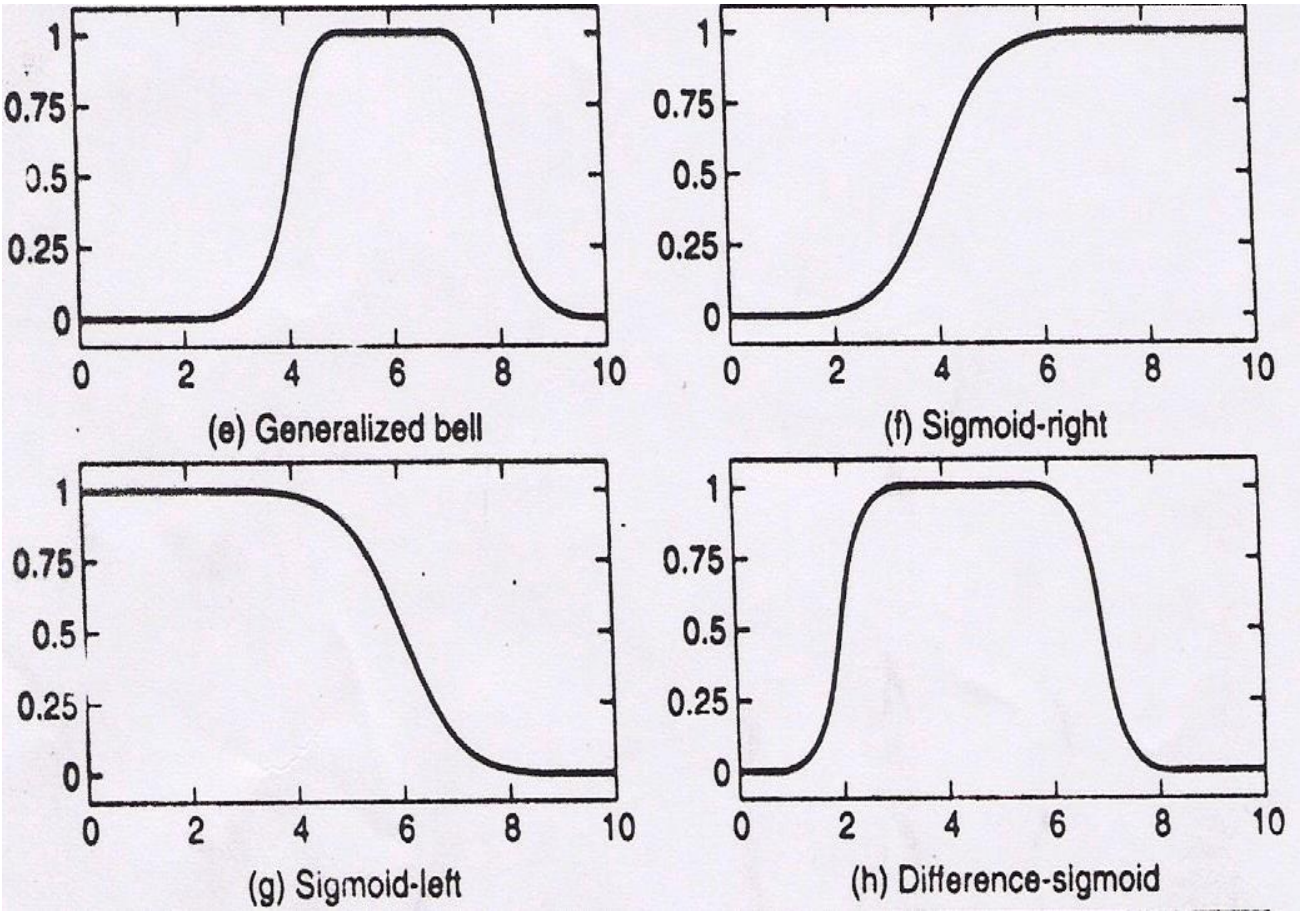

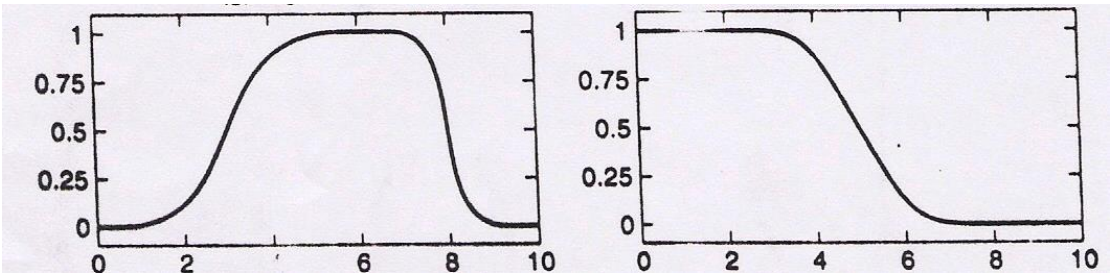

(i) Polynomial –PI (j) Polynomial -S

Fig.3.3 Different Types of Membership Functions

mapping process provides the basis from which the inference or conclusions can be made. A fuzzy inference process consists of the following steps:

1) Fuzzification of input variables 2) Application of fuzzy operator (AND, OR, NOT) in the IF (antecedent) part of the rule 3) Implication from the antecedent to the consequent (THEN part of the rule) 4) Aggregation of the consequents across the rules 5) Defuzzification.

Example: To understand the above we take an example of a fuzzy inference system used for restaurant tipping. Food and service are the input fuzzy variables (0-10 range) and tip is the output fuzzy variable (0-25% range). The food is described by two membership functions bad and delicious. The service is described by three membership functions poor, good and excellent. The output tip is characterized by three-membership function cheap, average and generous. The following three rules are applied to the system:

1) IF service is poor or food is rancid THEN tip is cheap 2) IF service is good then tip is average.3) IF service is excellent or food is delicious THEN tip is generous.

The processing of these rules is done in the horizontal direction and is as shown in fig (3.4). Let us assume that the score of the quality of the service is 3, and that of the food is 8. This crisp input, when referred to MF poor, gives the output μ=0.3,which is the result of fuzzification (step1). The score for food when referred to MF Bad gives the result of fuzzification as μ=0.Once the inputs have been fuzzified, we know the degree to which each part of the antecedent of a rule has been satisfied. In the rule the OR or max operator has been specified, and therefore between the two values, 0, 3 and 0,the result of the fuzzy operator is 0.3,that is, the 0.3 value is selected (Step2). This is also defined as the degree of fulfillment (DOF) of the rule. If, on the other hand, the rule contains an AND or minimum operator, the value of 0 will be selected. The implication step helps to evaluate the consequent part of a rule. In this rule, the output MF cheap is truncated at the value 0.3 to give the fuzzy output (Step 3) shown. All the other rules are evaluated in the same way and their contributions are shown on the right. These outputs are

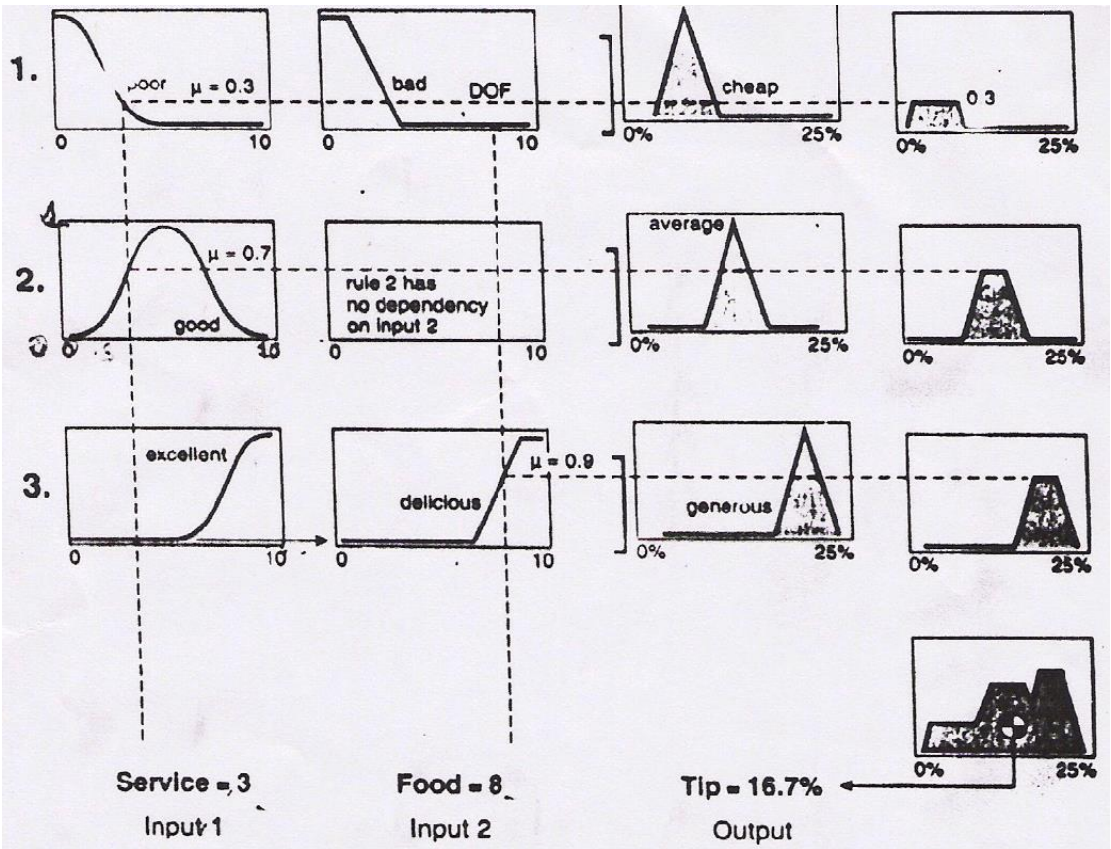

Fig.3.4 Information Processing in Fuzzy System for restaurant tipping

combined or aggregated to give the final fuzzy output (Step 4) shown at the bottom of the figure. Finally the fuzzy output (area) is converted to crisp output (Tip=16.7%); a single number which is known as defuzzification (Step 5). We can see that the information is processed only in the forward direction only in a parallel manner and the input/output mapping property is evident.

3.5 Implication methods

It is the process of shaping the fuzzy set in the consequent part based on the antecedent part of a rule. There are a number of implication methods. The Mamdani type Fig. No. 3.5, Lusing Larson type Fig.No.3.6 and the Sugeno type Fig.No.3.7 are the most commonly used. In the Mamdani method the output membership function is truncated as shown. In the Lusing Larson method the output member function is being scaled instead of being truncated.

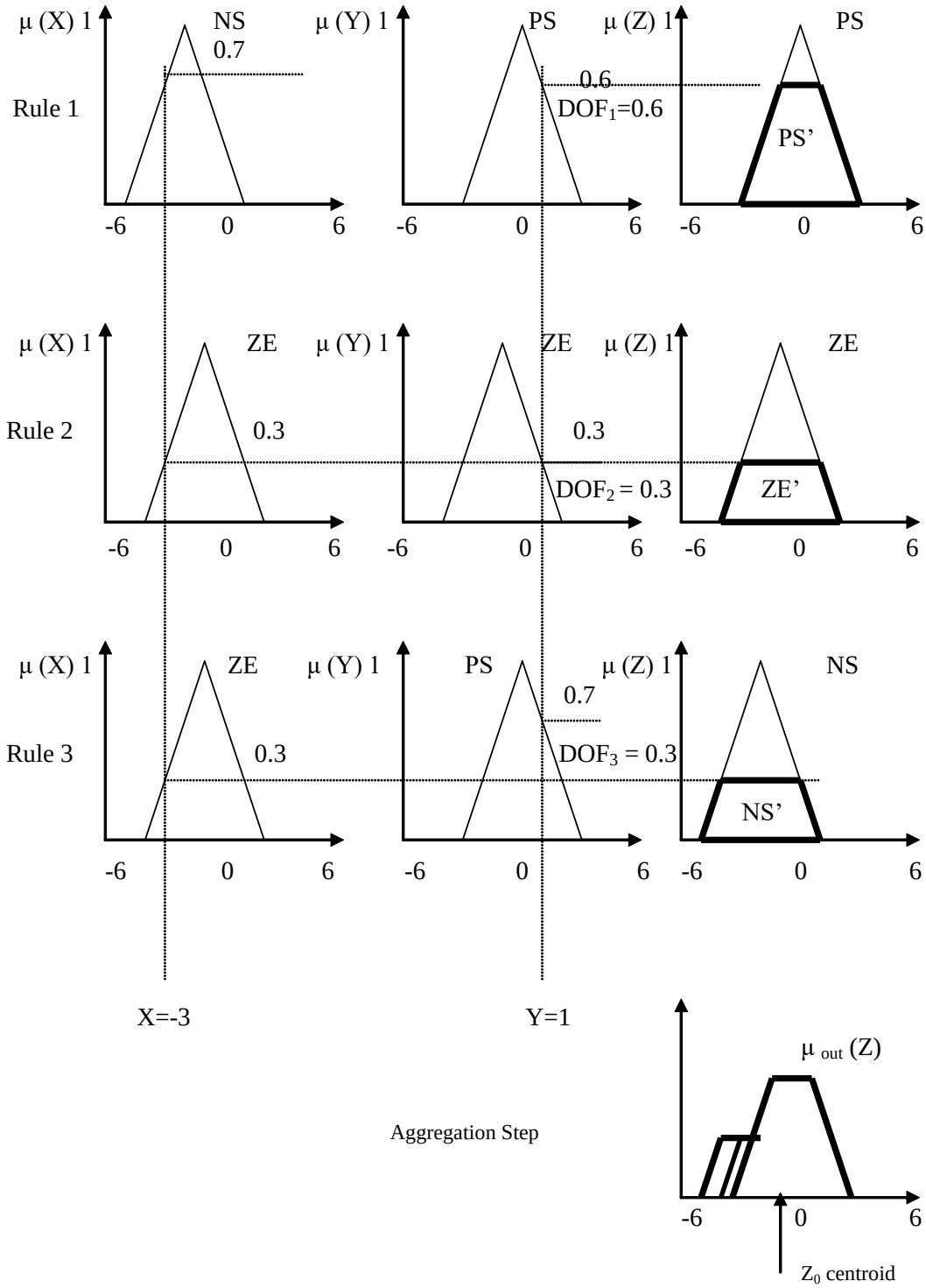

Fig.No.3.5 Three Rule Fuzzy System Using Mamdani Method

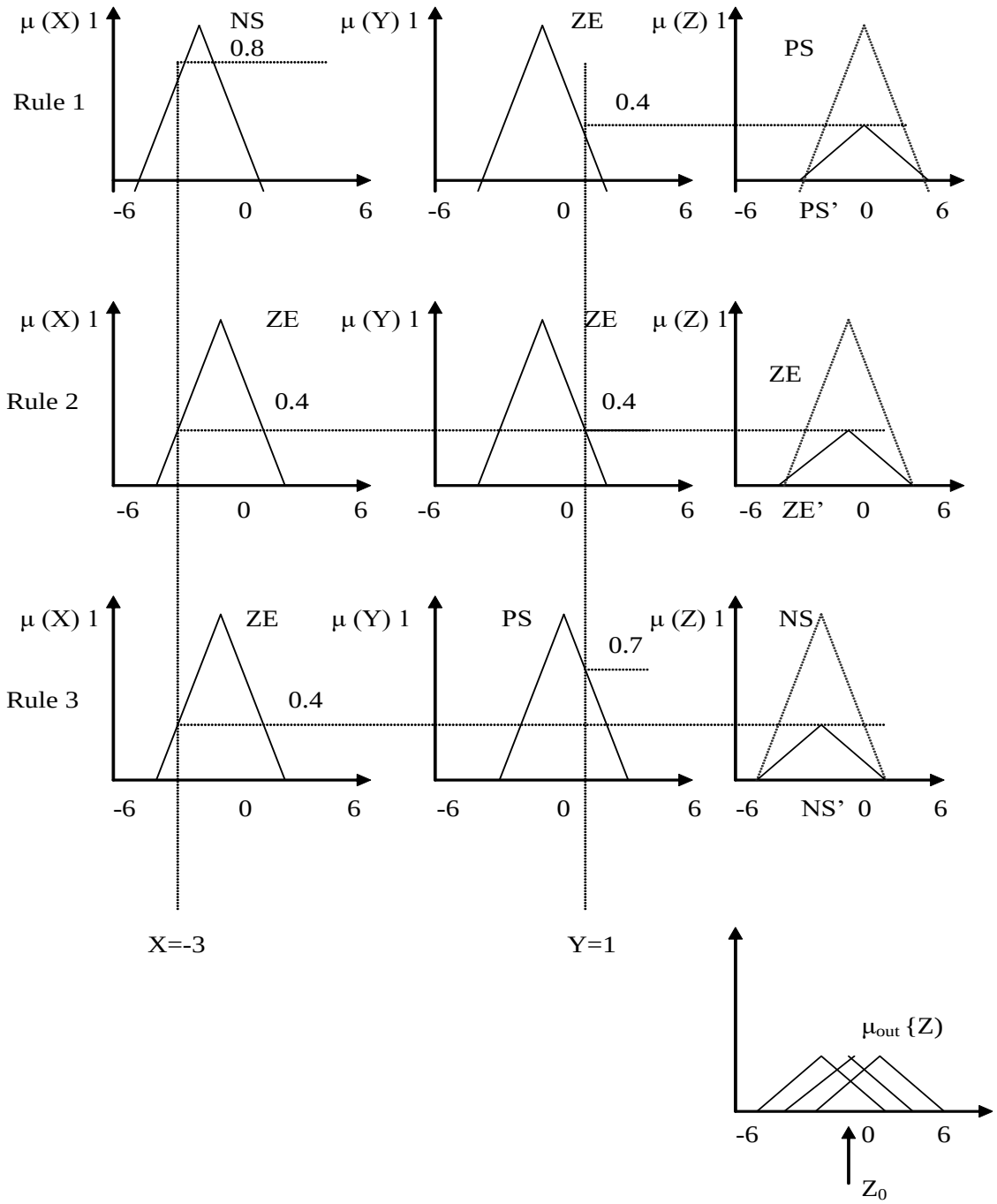

Fig. 3.6 Three Rule Fuzzy System Using Lusing Larson Method

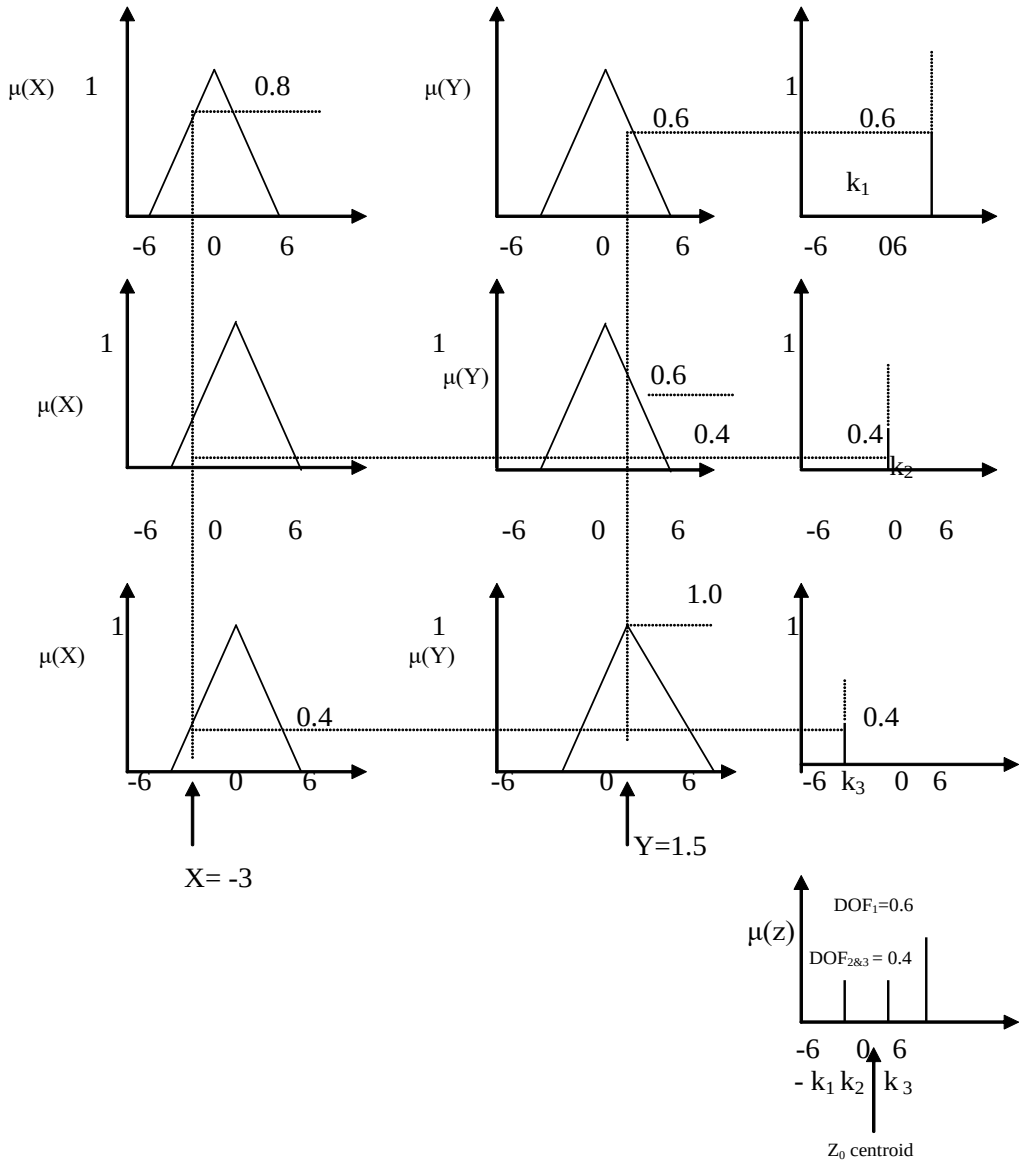

Fig..3.7 Three rule fuzzy system using Zero order Sugeno method

Sugeno Implication Method: In this method the output membership functions are only constants or have linear relations with the inputs. If the output membership function is a constant the method is called a zero order Sugeno method, whereas with a linear relation it is called as the first order Sugeno method. The Sugeno method is widely used in the Sugeno type Controller as it deals with highly non-linear plants where control actions can be locally described by linear or non-linear control. This method has been used in the present project.

3.6 Defuzzification methods

Defuzzification is the process of transforming a fuzzy output of a fuzzy system into a crisp output. Following are some of the defuzzification methods.

1) Center of area/gravity defuzzification: This method calculates crisp output Z_0 from the center of gravity of the aggregated output membership function Fig. No 3.8. The expression for the center of area is

$$Z_0 = \frac{\int Z.\mu_{out}(Z)}{\int \mu_{out}(Z)dZ} \tag{3.1}$$

2) Center of Sums Method: This is similar to Center of Area method except for the fact that overlapping areas if they exist are counted repeatedly. See Fig. No 3.9
3) Height defuzzification: This method calculates a crisp output from a composed fuzzy value by performing a weighted average of individual fuzzy sets. The heights of each fuzzy set are used as weighting factors in the procedure. See fig.No.3.10

4) Middle of Maxima Defuzzification: This method calculates crisp output from an output membership function where the highest membership function component is considered only.

$$Z_0 = \sum_{m=1}^{M} Z_m / M \tag{3.2}$$

Where Z_m= m^{th} element of the universe of discourse, where the output MF is at the maximum value, and M=number of such elements. See fig No.3.11.

5) Sugeno Method: In the zero order Sugeno method (Fig. No 3.7), the defuzzification formula is:

$$Z_0 = \frac{K_1.DOF_1 + K_2.DOF_2 + K_3.DOF_3}{DOF_1 + DOF_2 + DOF_3} \quad (3.3)$$

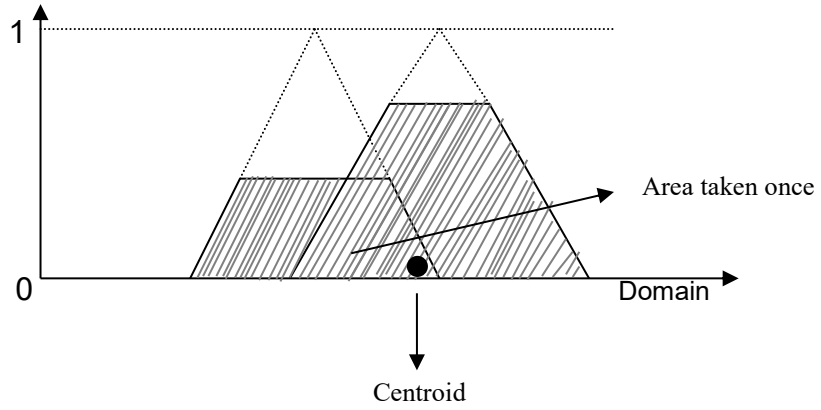

Fig..3.8. A Graphical representation of the center- of- area defuzzification method.

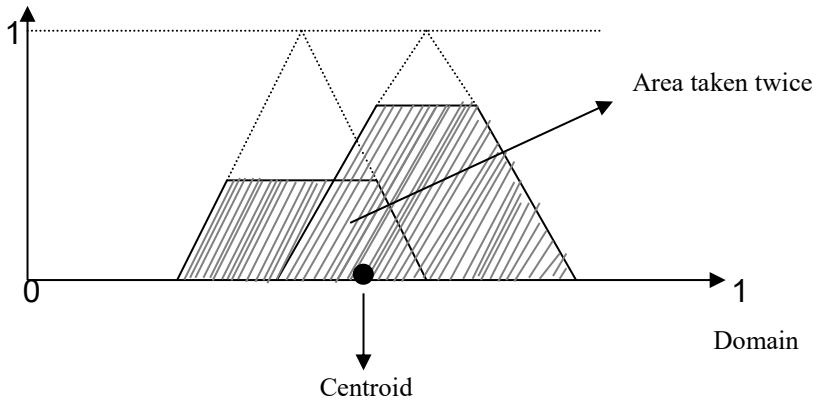

Fig.3.9. A Graphical representation of the center- of- Sums defuzzification method.

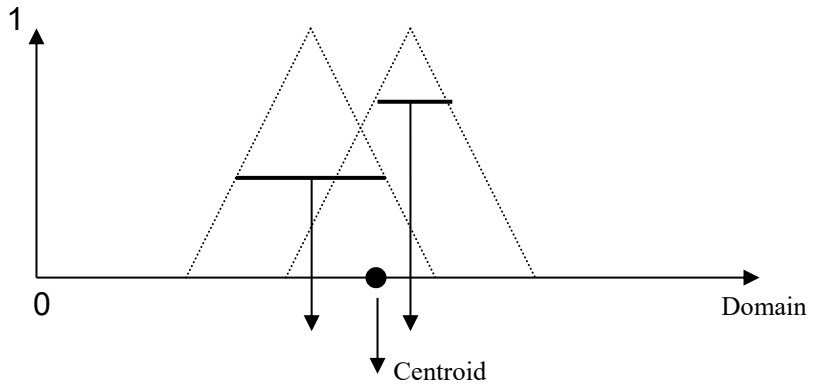

Fig. 3.10. A graphical method of the height defuzzification method.

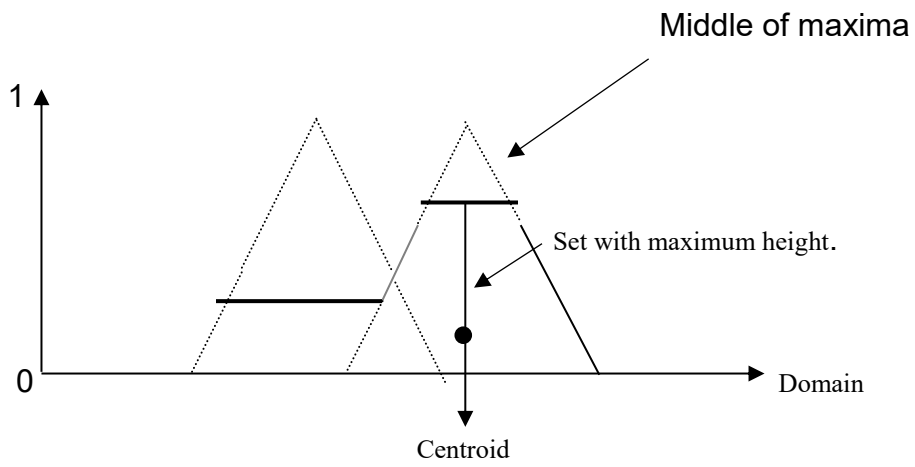

Fig. 3.11. A graphical representation of the Middle of- maxima defuzzification.

4- Fuzzy Controllers

4.1 Conventional controllers

Conventional controllers like the PID controller have been highly successful and are widely used in the industry. However they have the following limitations.

Limitations of conventional controllers**:**

1) Plant Nonlinearity: The efficient linear models of the process or the object under control are too restrictive. Nonlinear models are computationally intensive and have complex stability problems.

2) Plant Uncertainty: A plant does not have accurate models due to uncertainty and lack of perfect knowledge.

3) Multivariable, multiloops and environment constraints: Multivariate and multiloop systems have complex constraints and dependencies.

4) Uncertainty in measurements: Uncertain measurements do not necessarily have stochastic noise models.

5) Temporal behaviour: Plants, controllers, environments and their constraints vary with time. Also time delays are difficult to model.

To overcome these limitations attempts have been made to construct other controllers, like the Sliding mode controller, the H_∞ controller, fuzzy controllers, neuro-fuzzy controllers etc.
A fuzzy control system is a real time expert system, implementing a part of a human operator's or process engineer's expertise which does not easily lend itself to being easily expressed in PID parameters or differential equations but rather in situation /action rules.
Fuzzy control can be seen as a heuristic and modular way for defining nonlinear, table based control systems.

4.2 Benefits of fuzzy controllers

1) Fuzzy controllers are more robust than PID controllers because they can cover a much wider range of operating conditions than PID can, and can operate with noise and disturbances of different natures.

2) Developing a fuzzy controller is cheaper than developing a model based or other controller to do the same thing.

3) Fuzzy controllers are customizable, since it is easier to understand and modify their rules, which not only use a human operators strategy but also are expressed in natural linguistic terms.

4) It is easy to learn how fuzzy controllers operate and how to design and apply them to a concrete application.

.4.3 A Boat Control Problem

As an example we consider the following simple controller.

The problem is to drive a boat so that it reaches from location A to B along a straight line. Suppose the water currents make the boat stray from the straight-line path. The problem is to design a controller that will bring the boat back to the straight-line path. To do this we will first have to derive a mathematical model of the plant and then a mathematical model of the controller. Now if we do not have or we cannot obtain a mathematical model, what can we do? We can use our own experience. We turn the rudder left or right depending on the position of the boat. If the boat is situated exactly on the line we should not do anything, if the boat is situated to the left of the line we should turn the rudder to the right (Let us call this direction positive), if the boat is situated to the right of the line we should turn the rudder to the left.

We formulate our control laws as: 1) If deviation is zero then turn is zero. 2) If deviation is positive then turn is negative. 3) If deviation is negative then turn is positive. To improve the control quality, we need to increase the number of values describing each variable. We use the terms small, medium and big to describe the deviation and the turn. Then our rules can be put in the form of a table.

Table No. 4.1

Deviation	NB	NM	NS	Z	PS	PM	PB
Turn	PB	PM	PS	Z	NS	NM	NB

Where the following abbreviations are used. N- negative, P- positive, S- small,

M - medium, B - big.

So, the controller is described in the form of a rule table. To improve the control quality further we can use one more input-the rate of change of deviation and classify it as NS, NM, NB, PS, PM, PB. This provides the controller with some degree of prediction. For example, if deviation is negative big and the rate of change of deviation is also negative big then this means that at the next moment the deviation will be even more negative and the control has to be more positive. On the other hand if deviation is negative big and the rate of change of deviation is positive big then this means that at the next moment the deviation will be less negative and the control has to be less positive.

These rules are processed using fuzzy set theory to calculate a control output for the boat controller.

4.4 Properties for a set of rules

Following are the important properties for a set of rules

Completeness: A set of if-then rules is complete if any combination of input values results in an appropriate output value.

Consistency: A set of if-then rules inconsistent if there are no two rules with the same rule antecedent but different rule consequents.

Continuity: Two rules are neighbours, if their cells are neighbours. A set of if-then rules is continuous if it does not have neighbouring rules with output fuzzy sets that have empty intersection.

In fuzzy control, the measurement results or process outputs (controller inputs) are crisp (non-fuzzy) numbers produced by technical devices. Also the controller outputs have to be crisp to control different technical devices (actuators). This requires that the fuzzy controller needs an interface at both input and output sides.

4.5 Input Scaling

There are two principal cases in the context of input scaling:

1) The membership functions for the inputs and outputs are defined of the controller are defined off-line on their physical domain. In this case the inputs and outputs of the controller are processed only using fuzzification, rule firing and defuzzification.
2) The membership functions for both inputs and outputs of the controller are defined offline, on a common denormalized domain. This means that the physical values of the actual inputs and outputs of the controller are mapped on the predetermined normalized domain. This mapping, called normalization is done by the so-called normalization factors. Scaling is the multiplication of the physical input value with a normalization factor so that it is mapped on to the normalized input domain. Denormalization is the multiplication of the normalized output value with a denormalization factor so that it maps onto the physical output domain.

The advantage of this is that fuzzification; rule firing and defuzzification can be designed independently of the physical domain of the inputs and outputs. In normalization procedure the error vector e = x-w of physical signals is normalized with the help of a matrix N_e containing predetermined normalization factors for each component of e:

$e_n = N_e . e$

N_{e1} 0 … 0

$$\text{With} \quad N_e = \begin{matrix} 0 & N_{e2} & 0\ldots & 0 \\ 0 & 0 & N_{e3} & 0 \\ 0 & 0 & 0 & N_{eK} \end{matrix} \qquad (4.1)$$

Where N_e are real numbers. Normalization also affects the angle of the switching line, which divides the phase plane of the system to be controlled into two semi planes (fig.3.4).

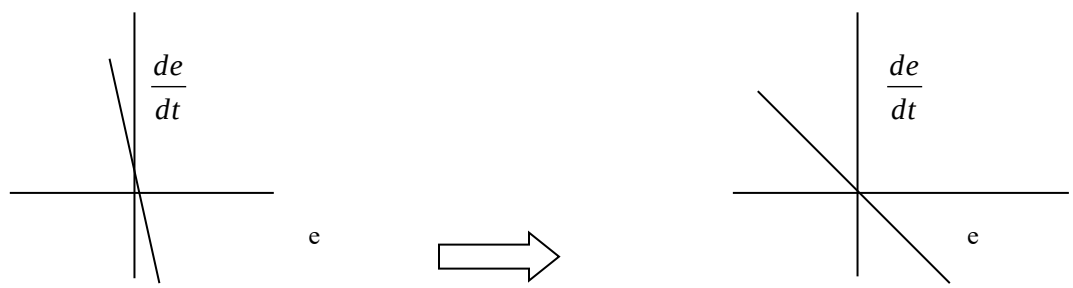

Fig 4.1 Normalization

4.6 Tuning of the Controller

The following priority list is recommended for the tuning process of the controller.

1) The output denormalisation factor has the most influence on stability and oscillation tendency. Because of its strong impact on stability, this factor is assigned the first priority in the design process.

2) Input scaling factors have the most influence on basic sensitivity of the controller with respect to the optimal choice of the operating areas of the input signals. Therefore input scaling factors are assigned the second priority.

3) The shape and location of input and output membership functions may influence positively or negatively the behaviour of the controlled system in different areas of the state space provided that the operating areas of the signals are optimally chosen.

4.7 Types of Fuzzy Controllers

Fuzzy controllers can be open loop and closed loop. In closed loop we can have Proportional-Derivative (PD), Proportional Integral (PI) Fig.No.4.2 and Proportional-derivative-Integral (PID) Fig.No4.3 type controllers. These controllers apply fuzzy logic processes to the concept of classical PID controllers. The general structure of a plant along with a controller is shown in Fig No.4.4.

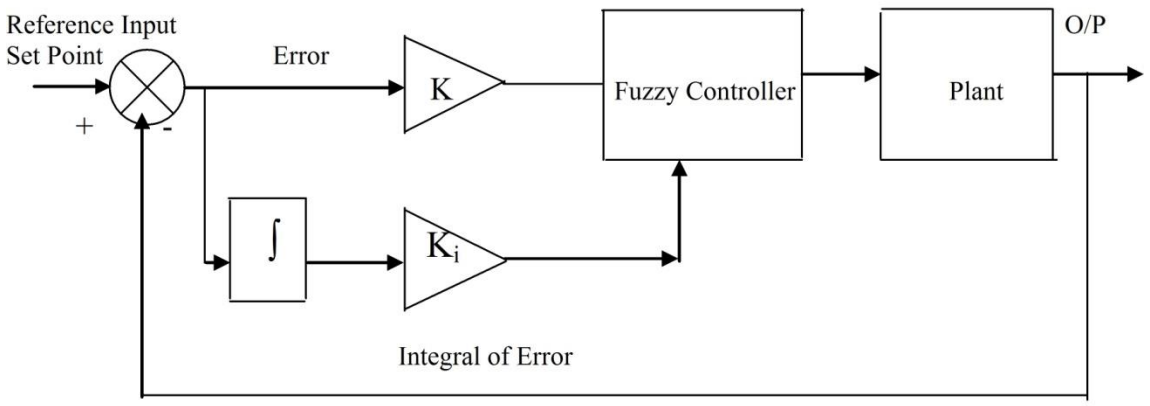

Figure 4.2. A block diagram of a fuzzy PI Controller.

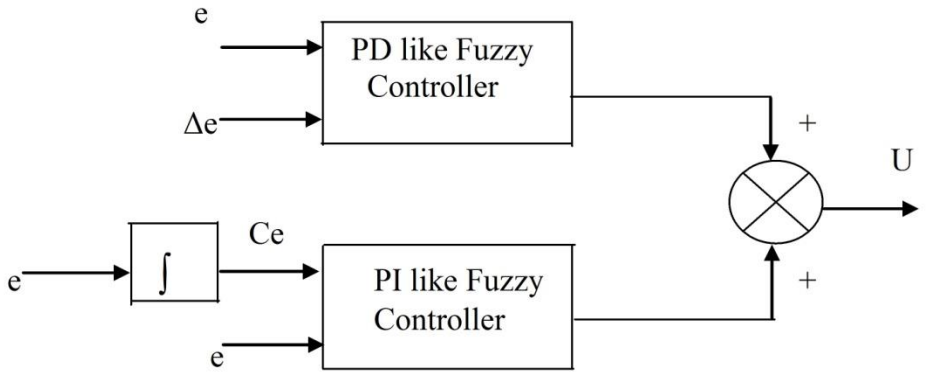

Figure 4.3. Structure of a PID like Fuzzy Controller

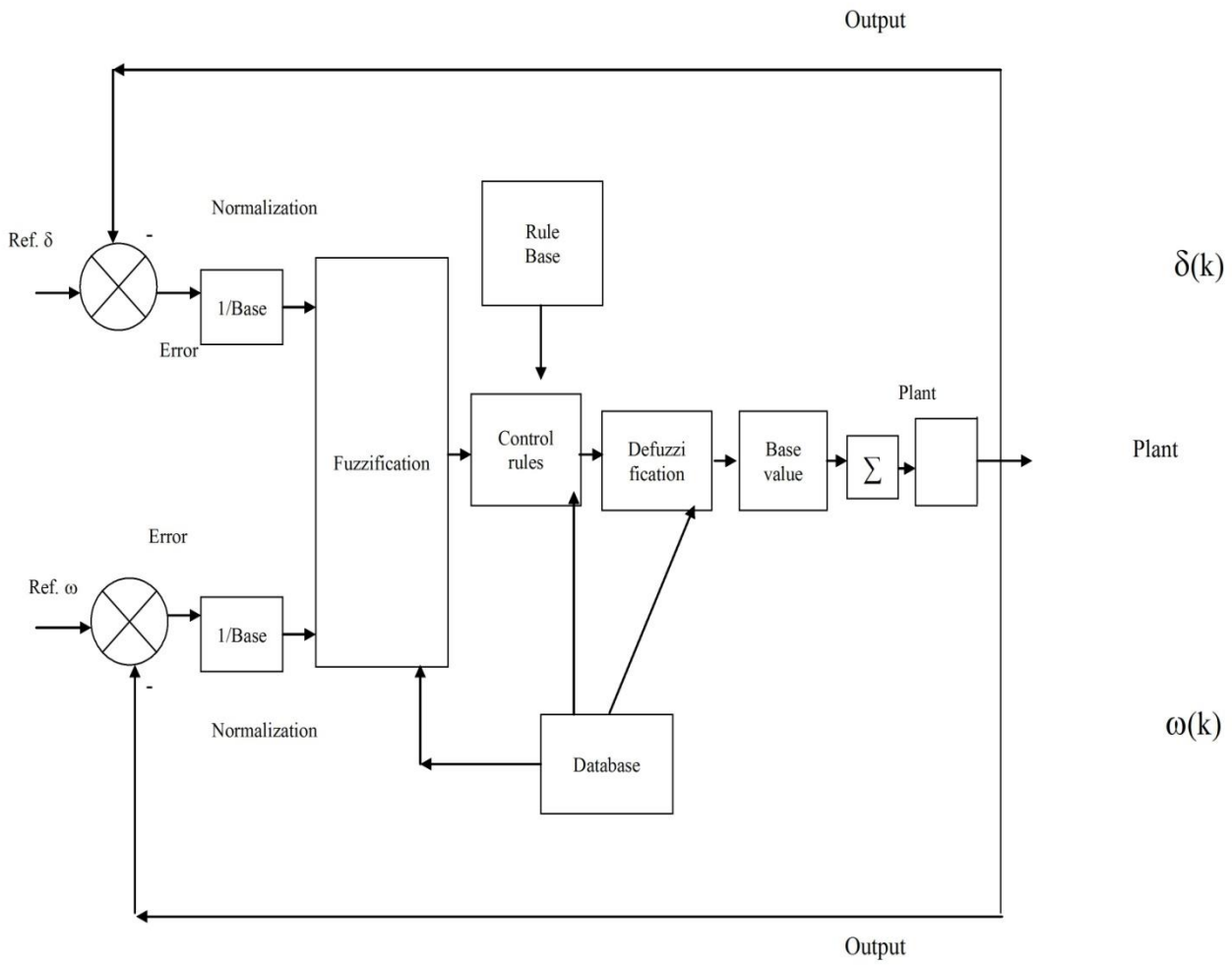

Fig.No.4.4. Structure of fuzzy controller in feedback system

We can also have adaptive fuzzy controllers.

4.8 Adaptive Fuzzy Control

Most of the real world processes that require automatic control are nonlinear in nature. That is their parameter values change as the operating point changes over time, or both. As conventional control schemes are linear, a controller can only be tuned to give good performance at a particular operating point or for a limited period of time. The controller has to be retuned if the operating point changes, or retuned periodically if the process changes with time.

This necessity to retune has driven the need for adaptive controllers that can automatically retune themselves to match the current process characteristics.

5- Fuzzy Controller Implementation

5.1 Implementing a Fuzzy controller

There are essentially two methods for implementation of fuzzy control. The first involves rigorous mathematical computation for fuzzification, evaluation of control rules, and defuzzification in real time. A C program is developed with the help of a fuzzy logic toolbox such as MATLAB, RT/Fuzzy toolbox for MATRIX by Integrated Systems Inc, FIDE by Aptronix, NeuFuz by National Semiconductor, SieFuzzy by Siemens etc. The program is compiled and the object program is loaded in a digital signal processor (DSP), general-purpose processor or a specialized fuzzy processor for execution.

The simplest and the most usual way to implement a fuzzy controller is to realize it as a computer program on a general purpose processor. However, a large number of fuzzy control applications require a real time operation to interface high-speed external devices.

For example, automobile speed control, electric motor control robot control is characterized by severe speed constraints. Software implementation of fuzzy logic on general-purpose processors cannot be considered as a suitable design solution for this type of application. In such cases, specalised fuzzy processors can match design specifications. Togai and Watanbe developed the first fuzzy logic chip in 1985.Later Yamakawa developed a fuzzy logic hardware using analog techniques. Since then, several chips have been proposed utilizing both analog and digital techniques.

An example of a specialized fuzzy processor is the FC110 from Togai and the AL220 from Adaptive Logic. Commercial ASIC (Application Specific IC's) are also available for implementation.

The other method is the LOOK-UP table method, where all the input/output static mapping computation (fuzzification, evaluation of control rules, and defuzzification) is done ahead of time and stored in the form of a large look-up table for real time implementation. These tables require a large amount of memory for precision control, but their execution maybe fast.

6- Brief History of fuzzy logic Developments:

6.1 History and General Applications of fuzzy logic

Following is the brief history of fuzzy logic development and the applications developed.

1965:Concept of fuzzy set theory by Lotfi Zadeh (USA)

1972:First working group on fuzzy systems in Japan by Toshiro Tearano

1973:Paper about fuzzy algorithms by Zadeh (USA)

1974:Steam engine control by Ebrahim Mamdani (UK)

1977:First fuzzy expert system for loan application evaluation by Hans Zimmermann (Germany)

1980:Cement kiln control by F.L Smidth & Co-Lauritz P.Holmblad (Denmark)-the first permanent industrial application

Fuzzy logic chess and backgammon program-Hans Berliner (USA)

1984:Water treatment (chemical injection) control (Japan)

Subway Sendai Transportation System Control (Japan)

1985:First Fuzzy chip developed by Masaki Togai and Hiroyuke Watanbe in Bell Laboratories (USA)

1986:Fuzzy expert system for diagnosing illnesses in Omron (Japan)

1987:Container crank control

Tunnel excavation

Soldering robot

Automated aircraft vehicle landing

Second IFSA Conference in Tokyo

Togai Infralogic Inc.-First fuzzy company in Irvine (USA)

1988:Kiln control by Yokogawa

First dedicated Fuzzy controller sold-Omron (Japan)

1989 Creation of Laboratory for International fuzzy Engineering Research (LIFE) in Japan

1990:Fuzzy TV set by SONY (Japan)

Fuzzy electronic eye by Fujitsu (Japan)

Fuzzy Logic Systems Institute (FLSI) by Takeshi Yamakawa (Japan)

Intelligent Systems control laboratory in Siemens (Germany)

1991:Fuzzy AI Promotion Center (Japan)

Educational kit by MOTOROLA (USA)

After 1992: Too many events, inventions and projects to mention.

Following are the current and future research topics considered by Japanese researchers and engineers

- Automatic control of dam gates for hydroelectric power plants (Tokyo Electric Power)
- Simplified Control of Robots (Hirota, Fuji Electric, Toshiba, Omron)
- Camera-aiming for the telecast of sporting events (Omron)
- Efficient and stable control of car engines (Nissan)
- Cruise control of Automobiles (Nissan, Subaru)
- Substitution of an expert for the assessment of stock exchange activities (Yamaichi, Hitachi)
- Prediction system for early recognition of earthquakes (Seismology
- Online monitoring of batch manufacturing processes (HONEYWELL)
- Automatic motor control for vacuum cleaners with a recognition of a surface condition and a degree of soiling (Matsushita)
- Recognition of motives in pictures with video cameras (Canon, Minolta)
- Back light control for camcorders (Sanyo)

6.2 Applications of Fuzzy Logic in Electrical Engineering

The following are some of the applications of fuzzy control in core electrical engineering.

1) A monitoring software GEN-AID for on line identification of errors in Power Generators developed by Westinghouse Corporation.

2) Fuzzy Adaptive Power System Stabilizers (PSS) have been developed.

3) Fuzzy logic has also been used in load forecasting and load flow planning as an alternative to analytical methods.

4) Power electronics drives for Speed Control of motors.

5) Wind generation systems.

6) Generator speed tracking control.

6.3:Overview

There are two views about fuzzy control. On one hand, many proponents of this technology claim that fuzzy control will revolutionalize control engineering, promises major breakthroughs, and will be able to solve complex engineering problems with very little effort. On the other hand, many representatives of the control engineering community still proclaim the philosophy that everything that can be done in fuzzy control can be done conventionally as well and announce a breakdown of the fuzzy hype in the near future.

Actually both the views are extremes and only a balanced view should be thought of.

7-Fuzzy Logic Controllers for a Single machine connected to an infinite bus

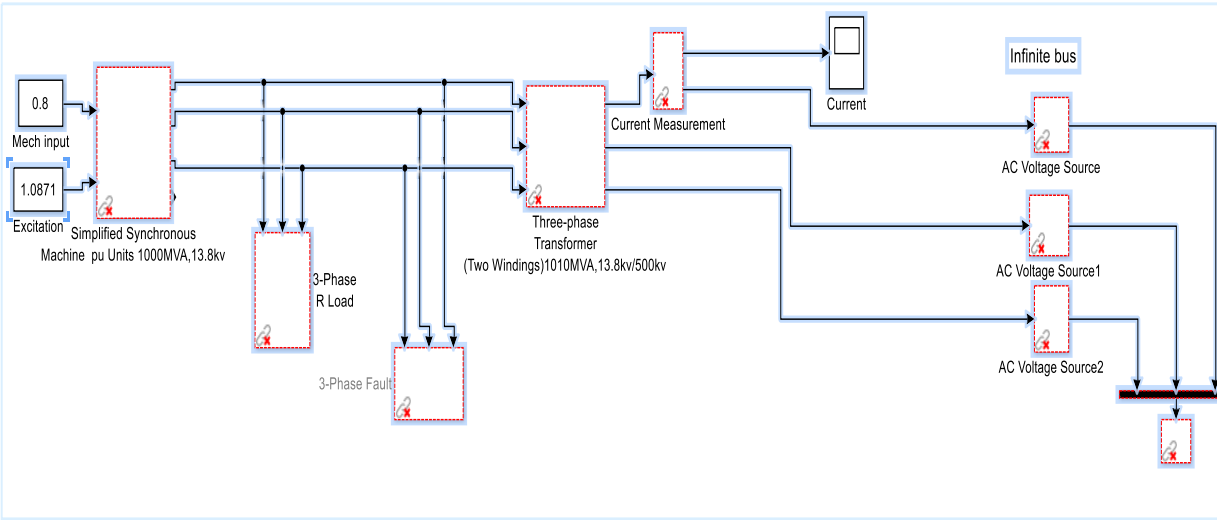

7.1 Single machine connected to infinite bus

The model above shows a single machine connected to an infinite bus in the MATLAB –SIMULINK environment.

The classical model of the synchronous generator is represented in MATLAB by the block of a simplified synchronous machine. The (p.u) representation is chosen which requires that the inputs should be given in per unit and the outputs will also be given back in per unit. The infinite bus is represented by three constant voltage sources shifted in phase by 120º and connected in star. The **Powergui** block of MATLAB carries out the load flow. It ensures that the simulation starts in steady state. The machines –measurement demultiplexer block gives back information about the various output parameters.

Following are the specifications of the important equipments in the model:

Synchronous generator:

Thermal type, Salient pole 1000MVA, 13.8 KV, 50 Hz, No. Of poles = 2,

Internal Impedance X=0.5 (p.u)

Inertia Constant H=5.4sec

Step up Transformer:

1010 MVA, Y-Y, 13.8KV/500KV, 50Hz.

Primary Winding Resistance: 0.001(p.u), Primary Winding Inductance: 0.01(p.u).

Secondary Winding Resistance: 0.001 (p.u), Secondary Winding Inductance: 0.01 (p.u).

Magnetization resistance: 500 (p.u), Magnetization reactance: 500 (p.u).

The system is studied for a three phase-ground fault that is the most severe fault and small load changes. Other fault cases can similarly be studied.

7.2 Three Phase to ground fault on a Single machine connected to infinite bus

A transient three-phase ground fault is initiated near the generator and is cleared in 80μsec. The oscilloscope shows the waveforms of the power angle as a function of time (Fig 7.1). It is found that even after the fault is cleared; oscillations have started in the system that continue in the absence of damping. The X-Y plotter also shows the phase plane plot (δ versus ω). The circles indicate continuous oscillations.

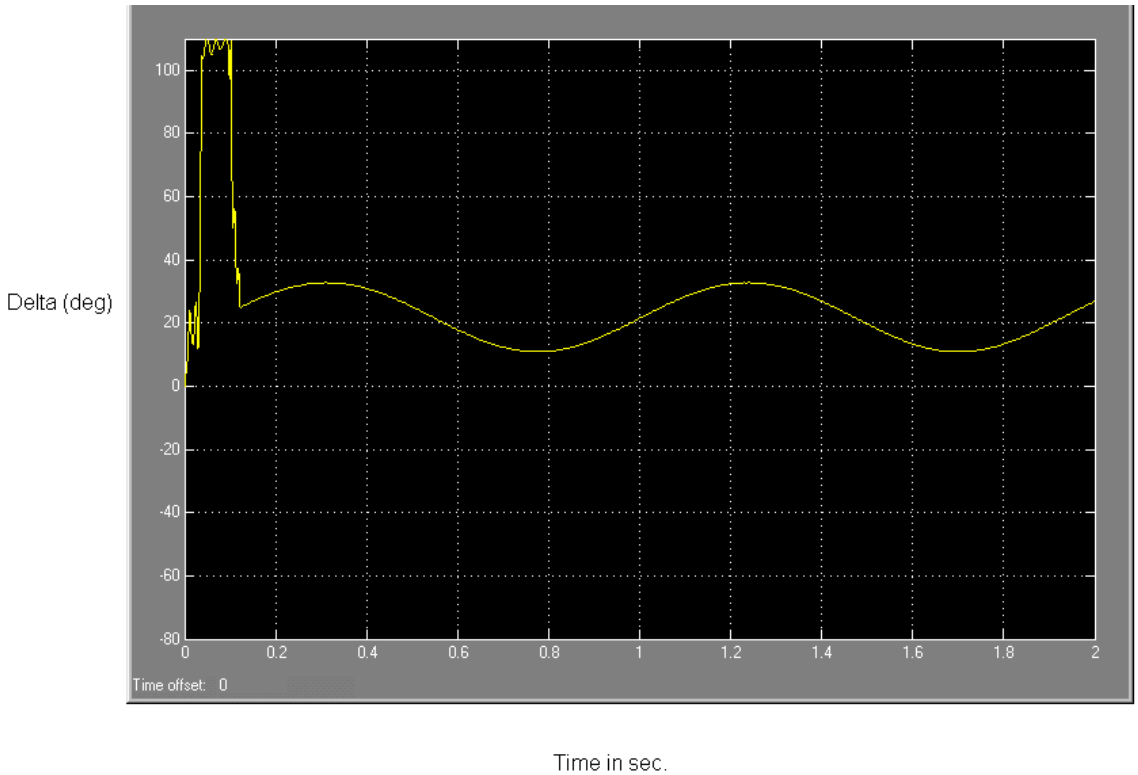

Fig. 7.1. Delta Vs Time for an Uncontrolled System

7.3 System with Fuzzy controller

When the fuzzy controller operates it decides as to whether to put into the circuit a capacitance, an inductance or nothing in between the synchronous generator and the infinite bus (Two.mdl). The controller decides the sequence and the timing of this. The controller attempts to bring the system back to the prefault state (initial δ_0).

The control system is an open loop but preprogrammed type. The controller is tuned offline and then it is connected to the system.

The controller chosen is of the Sugeno Takagi type. These controllers are chosen when the system is nonlinear. The above power system is a very nonlinear type of system with many parameters. The inputs to the controller are obtained from the power angle (δ) and the rate of change of power angle (ω). First the error and rate of change of error are obtained from the following equations.

$$e_\delta(k) = \delta_0 - \delta(k) \tag{7.1}$$

and

$$e_\omega (k) = \omega_0 - \omega(k) \tag{7.2}$$

These two quantities are mixed and from them the two fuzzified inputs S and θ are obtained.

$$S (\delta,\omega) = \sqrt{\delta^2 + \omega^2} \tag{7.3}$$

$$\theta (\delta,\omega) = \text{arc tan} (\omega/\delta) + k \Pi \qquad 0 \leq \theta \leq 2\Pi \tag{7.4}$$

When k = 0, (δ,ω) lies in the first quadrant, when k=1, (δ,ω) lies in the second or third quadrant, and when k=2, (δ,ω) is in the fourth quadrant.

The fuzzy set classifications are based on the severity of the disturbance. Here five partitions are considered for S and a linguistic variables associated with each set as follows:

A_1: zero (Z), A_2: small (S), A_3: medium (M), A_4: large, A_5: very large (VL)

The membership functions for these fuzzy sets are shown in Fig. No. 7.2.

Similarly the phase plane is divided into seven sectors B_1, B_2, B_3, B_4, B5, B_6, B_7 and a degree of membership is associated to each angle θ.

The membership functions for these fuzzy sets are shown in Fig no.7.3.

A heuristic trial and error procedure is needed to find an appropriate fuzzy partitioning for a desired response.

The actual membership functions for S and Theta were obtained by trial and error and are shown in Fig.No.7.4 and 7.5 respectively. Instead of sectors the actual membership functions for Theta have to be represented by triangular functions in Matlab. The output membership function is shown by Fig. No. 7.6

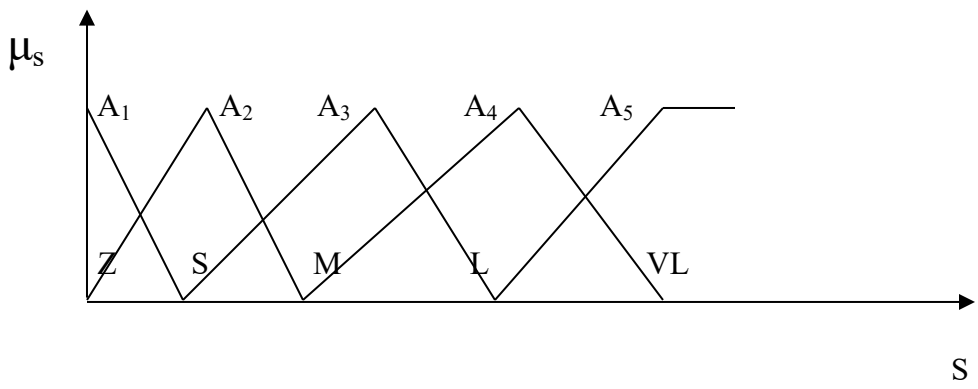

Figure 7.2. Fuzzy Partitions for S

7.4 Design of rule base

The control rules are constructed from the observations of the dynamical behaviour of the system and the switching curve. Here 35 rules were constructed and considered .The number varies depending upon the number of membership functions.

Table.7.1

S → / θ ↓	A_1	A_2	A_3	A_4	A_5
B_1	C_0	C_2	C_2	C_2	C_2
B2	C_0	C_2	C_2	C_2	C_1
B3	C_0	C_2	C_2	C_1	C_1
B4	C_0	C_2	C_1	C_1	C_1
B5	C_0	C_1	C_1	C_1	C_1
B6	C_0	C_1	C_1	C_2	C_2
B7	C_0	C_2	C_2	C_2	C_2

The rules in the table are read as:

If S is A1 and θ is B4 then output i.e. the control action is C_0 i.e. switch on the capacitor.

Logical inference:

This means determining membership grades for the controller output. The rules are of the form:

X_i : If S(k) is A_p and θ(k) is B_q then u(k) is C_n.

Where A_p , B_q and C_n are the corresponding fuzzy sets for X_i (rule i).The membership grade of X_i for the two inputs S(k) and θ (k) is

$$\mu (X_i) = \min \{ \mu_{Ap} (S (k)), \mu_{Bq} (\theta (k))\} \quad (7.5)$$

The membership value for the output C_n (n =0,1,2) is

$$\mu (C_0) = \Sigma \mu (X_i)/m_0 \qquad i = 1, 6, 11, \ldots \quad (7.6)$$

$$\mu (C_1) = \Sigma \mu (X_i)/m_1 \qquad i = 10, 14, 15, \ldots \quad (7.7)$$

$$\mu (C_2) = \Sigma \mu (X_i)/m_2 \qquad i = 2, 3, 4, \ldots \quad (7.8)$$

Where m_0, m_1, m_2 are the rules corresponding to each switching state (in this case $m_0+m_1+m2=35$).

Defuzzification Stage: The final control output must be a discrete value indicating the switching states. A decision procedure must be employed in order to determine the control value suggested by the membership value μ (C_n) defined above. The value of C_n with the largest membership degree is selected as the crisp output. For example if μ (C_0) =0.2, μ (C_1) =0.3 and μ (C_2) =0.8, then the output signal will be C_2 (switch on the capacitor). In MATLAB the Rule Viewer shows how all the rules are evaluated and added to give the control output. The surface Viewer shows the output surface versus any one or two inputs

In the above project if the output given by the Sugeno controller is greater than 1,the capacitance is switched on. If the output given by the Sugeno controller is less than 1 the inductor is switched on.

The fuzzy set partitioning of S and θ and organization of the rule base are constructed for the base system loading. For other loading conditions the controller will have to be tuned by scaling the fuzzy partitions. This will give robust performance of the controller with respect to loading conditions. The controller is constructed using the various logical blocks of Simulink and the Fuzzy toolbox.

When the simulation (Two.mdl) is done with the controller in the circuit it is found that the damping subsides (Fig. No 7.7). Three switchings occur. First the capacitance is switched on. Next the inductance is switched on. Finally the synchronous machine is directly connected to the infinite bus. The switching operations are shown by Fig. No. 7.8

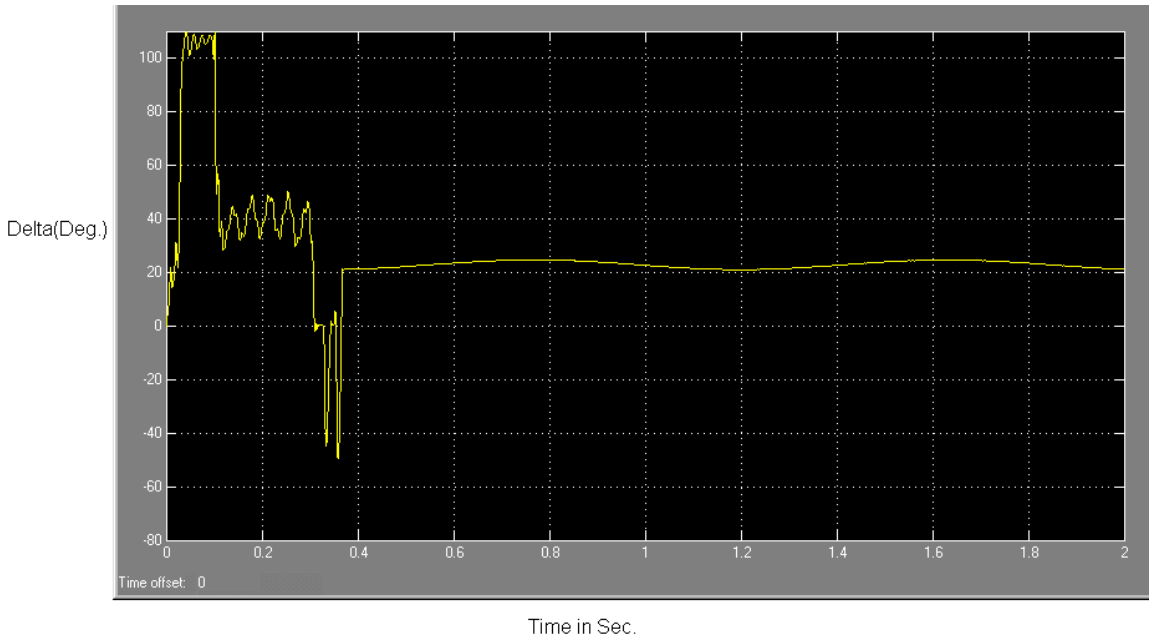

So we conclude from the above that the fuzzy controller mitigates the oscillations in a single machine connected to an infinite bus.

8- Conclusion

We see that in both the cases studied the fuzzy controller damps the oscillations. In the above the inherent damping of the system has not been considered. If it is considered, it will improve the performance further. Thus we see that the overall system stability-both transient and dynamic is improved.

A rule based controller using fuzzy logic for control of line reactance to damp power oscillations is proposed .The structure of the controller is easy to understand and easy to implement and is attractive from an engineering point of view. The simulations show that the fuzzy controller gives satisfactory results and improves system stability. In the simulations the effect of inherent system damping is not included .If the effect of that is included the system performance will improve further.

References

1) Fuzzy Controllers by Leonid Reznik, Victoria University of Technology, Melbourne, Australia, Newness press, 1997.
2) An Introduction to Fuzzy Control by D.Driankov, H. Hellendoorn, M. Reinfrank-Narosa Publishing House. Reprint 2001
3) Modern Power Electronics and AC Drives by Bimal.K.Bose- Pearson Education.2002
4) Robust, Near Time Optimal Control of Power System Oscillations with Fuzzy Logic-IEEE Transactions on Power delivery, January1996. G. Andersson, K. Tomsovic, M. Noroozian.
5) Current status of fuzzy set theory applications in Power systems –Transactions of IEE, Japan, 1993 by K. Tomsovic.
6) Bang-Bang Series Capacitor Transient Stability Control by D.N. Kosterev and W.J. Kolodziej , IEEE Transactions on Power Systems, May1995.
7) Power System Controls and Stability by P. Kundur. McGraw-Hill 1994.
8) Power System Control and Stability by P. M. Anderson and A. A. Fouad. –Iowa State University Press. Reprint 1984.
9) Fundamentals of Power System Protection by Y.G.Paithankar and S.R.Bhide, Prentice Hall of India 2003.
10) Electric Energy Systems Theory. By Ole.Elgard, Tata McGraw-Hill, 1973.