Design and Fabrication of an Electric go-kart

Morisho P. Jenny

Bahram Abdallah

Publication Partner: IJSRP INC.

4/12/2023

Publication Partner:
International Journal of Scientific and Research Publications (ISSN: 2250-3153)

Design and Fabrication of an Electric go-kart

Authored by:
Morisho P. Jenny
Bahram Abdallah

Publishing Partner:
IJSRP Inc.
www.ijsrp.org

ISSN 2250-3153
9 772250 315302

Preface

This project presents the design and analysis of an electric motor-powered kart. This study's main objectives are to reduce the use of cars that run on fossil fuels and to create an effective vehicle for the rapidly expanding electric vehicle industry.

In the world of racing, the vehicles are not cost effective as far as fuel consumption, thus Electric engines are replacing the traditional internal combustion engines due to benefits including reduced pollution, easy maintenance, efficient fuel management, and environmental friendliness. With all the advantages listed above, electric go-karts are replacing traditional go-karts. It is crucial to undertake a static and dynamic examination of the go-kart chassis since the chassis of any vehicle is crucial to maintaining the speed and performance of the vehicle.

The goal of this report is to design and create a functional model of an electric go-kart. The go-kart's construction and design were kept basic to allow even amateur drivers to operate it. The design was created with the idea of creating a strong vehicle that can support more weight and offer the best amenities at a reasonable price.

We would like to convey our heartfelt appreciation to Mr. Magore, our research supervisor, for providing us with the chance to conduct the research and for offering vital guidance throughout the process. It was an honor to work and study under his supervision.

Copyright and Trademarks

Publication Partner:
International Journal of Scientific and Research Publications (ISSN: 2250-3153)

Authors

Morisho Penesenga Jenny, Student.

Kenyatta University/Mechanical Engineering Department, Nairobi, Kenya

Jennymorisho@gmail.com

Bahram Abdallah Abdallah, Student.

Kenyatta University/Mechanical Engineering Department, Nairobi, Kenya

Bahramabdalla@gmail.com

Table of Content

Contents

1. Introduction

1.1 Background Study

Electric vehicles have been around since car manufacturing began. Robert Davidson in Scotland created the first functional electric vehicle, a 16-foot (4.9 meter) truck powered by electro-magnetic motors, in 1837 [1]. Although the internal combustion engine gradually gained the upper hand—partly because of the limited range of electric vehicles—little-known ventures into making electric cars continued.

In motor sport, Formula E kicked off the electric street racing revolution at the 2014 Beijing E-Prix on September 13, 2014, and 25 laps of racing were done [2].

With this growing interest in electric vehicles and the numerous benefits they have on the environment and the economy at large, in this project we want to take a deeper look at the design and manufacturing of an electric go-kart. A go-kart, in accordance with the definition given by the International Karting Commission–Federation International Automobile (CIK–FIA), is a land vehicle with or without bodywork that has four wheels that are in touch with the ground; two of these wheels are used for steering while the other two are used to transmit power. Go-kart chassis typically have a body frame made of welded steel tubes in addition to the engine and attached wheels. The go-kart is a racing vehicle that is lightweight, compact, and primarily powered by an internal combustion engine (ICE).

An electric go-kart is a type of go-kart powered by electric motors and batteries, as opposed to a traditional petrol engine.

In this project, we want to design from scratch a car chassis, couple it to an electric motor through a chain drive system, and propel the car forward. A controller can be used to vary the speed and change the direction of rotation of the motor. We want to show the numerous advantages of using an electric go-kart in motorsport as opposed to the traditional internal combustion go-kart available on the market. With the rise of the Tesla car company Elon Musk

has proven that not only electric cars are capable of replacing the IC cars, they are actually better in numerous ways.

The project's main tasks will be designing the chassis, choosing the material for the chassis frame, analyzing and calculating the forces and stresses acting on the chassis, acquiring parts that are challenging to manufacture, and fabricating the chassis and attaching it to the front and rear axles, employing batteries to power the motor and a chain drive to connect it to the rear axle.

1.2 Problem Statement

The use of conventional IC engines is the most significant shortcoming of the present go-kart design, along with compatibility issues, heavy weight, speed durability, and other issues. We are aware that resources like gasoline and diesel are limited, and we cannot rely on nonrenewable power sources. The IC engine pollutes the environment, and the air and speed are hampered by a heavyweight kart.

In the world of motorsports, including Formula One, which many consider to be the pinnacle of the sport, approximately 256,000 CO2-equivalent tons of carbon dioxide are produced over the course of a race season due to the extremely powerful internal combustion engines. As you can see, this is a significant amount of greenhouse gases that are released into the environment and contribute to global warming, a serious issue.

Using batteries to power the automobiles without necessarily sacrificing speed is the best defense against this. Due to the fast revving engines, noise pollution is a significant issue in the motor sports industry. 140 dB is the loudness of the Formula 1 car when you are standing next to a track. Hearing loss occurs at 85 dB, which is again a huge concern. Electric go-karts are quieter and more eco-friendly than traditional internal combustion karts [3].

The main concern about electric go-karts in the past was that the range was limited and the go-kart would have less power and therefore less speed than an IC one, but due to the recent development of more powerful motors and better batteries, this concern can be addressed, and with the proper design of the chassis and the drive system, the difference will be negligible.

1.3 Objectives

1.3.1 General Objective

To Design, analyze and fabricate an electric Go-kart

1.3.2 Specific Objectives

- To design the chassis in Solidworks
- To carry out the car assembly in Solidworks
- To carry out the stress analysis of the chassis
- To fabricate the chassis
- To assemble the car
- To test the fully fabricated car

1.4 Justification

One of the most important objectives in the field of transportation, especially in urban areas, is the reduction of fuel consumption and CO2 emissions, as well as other harmful pollutants. There are many examples of new technologies, applied to conventional motor vehicles, that help achieve this objective.

The primary goal of this project is to limit the use of organic fuel-powered vehicles while also designing a low-cost racing car that can compete in the developing electric vehicle industry.

2. Literature Review

The Go-Kart is a simple, lightweight, small, and easy-to-drive vehicle. The most common parts of a go-kart are the engine, wheels, steering, tires, suspension, and frame. Since go-karts are primarily used for racing, it is essential to lower their weight for optimum acceleration. Go-karts are an excellent option for individuals active in racing due to their simplicity, low cost, and safer way of driving.

Vasant et al. [4] discussed the advantages of creating an electric go-kart. He demonstrated that the price of gasoline and diesel fluctuates daily. They increase with higher rates but rarely fall, and this was tremendously depleting the fuel reserves. He then made the case that it is crucial to create a vehicle that can run on electricity rather than gasoline because it is more readily available.

The automobiles in the realm of racing are not fuel-efficient in terms of cost. According to S. Arshibad [5], electric go-karts are replacing conventional go-karts due to all the benefits they provide, which include less pollution, low maintenance requirements, good fuel management, and environmental friendliness. He went on to show that a vehicle's chassis is crucial to preserving its speed and performance, making it necessary to do static and dynamic analyses of go-kart chassis.

The use of a model update approach is crucial for enhancing the dynamic features of the go-kart chassis structure, according to N.A.Z. Abdullah et al. [6]. By handling the record of dynamic reactions from test structures to have an accurate model for any reenacted examination and limited component, they showed that model refreshing is concerned with the remedy of limited component models. The topic of model refreshment had been important in underlying elements a long time ago. It had been used frequently and had been successfully applied to numerous disciplines, especially in identifying the strong solidity of a design.

Santosh Kumar et al. [7] offered a detailed examination of the systems used in a go kart, including the steering and braking, transmission, wheel and hub analysis, design parameters, steering system, static strength evaluation, components and dimensions, and consideration for

steering selection.Karting has been the subject of numerous research [8-10].This comprises study on the frame or chassis of go-karts; at times, researchers were concerned with material selection, simple structural analysis, safety, and structural stability.

Since the trend in chassis design involves developing lower-cost and lighter vehicle constructions with good safety efficiency, the proposal provided in this article is a concept design for the chassis of a self-built, electrically driven go-kart.

The chassis in a go-kart is mostly designed from circular, thin-walled tubes welded into a frame, as presented in references [11–16]. For this design, L-shaped angle iron was chosen for the frame of the chassis. The L-shape of angle iron prevents warping, bending, and buckling from weight and pressure to an incredible degree. Angle iron strength increases appreciably along its length according to its dimension and size relative to its structural intent. Angle iron is renowned for supporting vast amounts of weight and pressure according to its dimensions and scale.

It is a strong, lightweight product and is the perfect product to use wherever weight and strength are a concern. Compared to other types of materials, including other structural steel products, other metals, or the equivalent amount of wood or composite materials to equal the strength of angle iron, it is relatively affordable for its strength and durability [17].

The design, analysis, and fabrication of an electric go-kart, described in this paper, focus on the design and stress calculation of the chassis as the primary intent. Other important systems of a go-kart are in the background of the authors. For example, the steering system of a go-kart, as a fully developed and accepted system in this paper, is not the subject of a detailed discussion. The reasonable reason this has not been worked out yet is that the vehicle's safety and dependability require special consideration, time, and effort. The systems are not elaborated and detailed in full, as was previously specified; instead, they will be the focus of more scientific research and developments in the near future.

3. Methodology

3.1 Overview

3.1.1 Design Methodology

We started out by thinking about every possible system alternative and modeling the go-kart chassis in SOLIDWORKS and ANSYS. The model was altered and retested for the ultimate design. The engineering and reverse engineering processes utilized during the iterative design phase of the vehicle vary depending on several factors, like the availability of parts and other concerns.

The key design aims were to make the chassis lightweight while maintaining durability, to optimize the design by avoiding overdesigning, which would also help with cost savings, and we had a view of our kart with these in mind.To understand the design process better, we used a flow chart to plan the activities. This flow chart depicts the process of starting a project with an idea and completing it. This is the effective design process that, in the end, distinguishes the

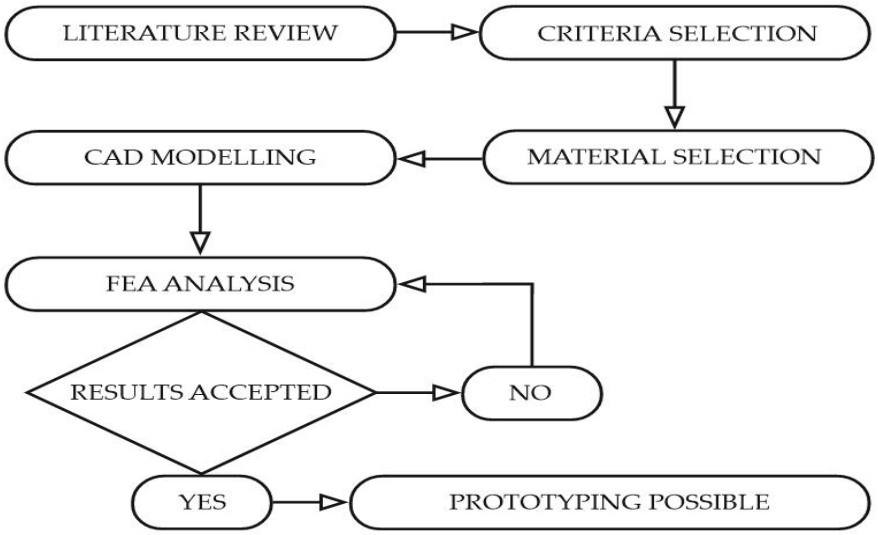

project.

\

The procedures used were:

- Idea:

The goal is to create a lightweight vehicle; therefore, we looked at a variety of solutions to make the go-kart lighter.

- Review of the literature

In this approach section, we looked at a number of prior projects where various methods for reducing the total weight of the go-kart had been employed. However, in the end, we decided to utilize a material that is both lightweight and strong.

- Design:

We have selected the strong and lightweight stainless-steel alloy AISI 1020 for this location. The rest of the project is constructed in accordance with the go-kart's blueprints.

- Analysis:

In this section of the project, we will evaluate and put prototype one to the test. To avoid using expensive and time-consuming physical models, the analysis will be done primarily in the Solidworks and Ansys application software.

- Fabrication:

The fabrication will be carried out in accordance with the analysis and design.

- Cost evaluation

At the conclusion, we will conduct a cost analysis of the project to determine how various costs are managed in its design.

3.1.2 Design Constraints

- **Weight Requirements**
  because the increase in the weight of the go-kart directly causes the decrease in acceleration, which is primarily employed in racing cars, weight has always been a vital part of the design of go-karts.

- **Minimalistic Design**
  The next most difficult task is to create a go-kart that is both compact and user-friendly.
- **Ergonomic design**
  This is an important consideration in design because the designer is worried about the driver's seating position and comfort. It will be straightforward and easy for the driver to drive while traveling in a comfortable environment. However, building go-karts in such a way that the driver is comfortable while staying inside the weight limit is quite challenging.

- **Environmental factors to consider**
  The key goal here is to prevent having a detrimental influence on the environment, which can be accomplished by using high-quality gasoline and ensuring adequate combustion in the engine while creating the go-kart.

3.2 Actual Design

3.2.1 Chassis

The purpose of the chassis is to effectively and securely encapsulate the entire kart, including the driver. Central and supportive to the kart is the chassis frame. It must be durable enough to withstand the vibrations that the moving kart creates. Angle irons may be utilized during construction. The major chassis components must be firmly connected to the chassis frame or to one another.

The construction must not have any articulations. Only conventional steering knuckle support and steering are permitted with articulated connections. Any additional tool that permits

articulation on one, two, or three axes is forbidden. A go-kart's structure is made up of pipes and other parts with varied cross sections. High levels of stability, torsional rigidity, and flexibility are required for the go-kart.

It also has enough strength to support the weight of the operator and any attachments. The operator's comfort and safety were taken into consideration when designing the chassis. The load is added without compromising the frame's structural soundness, which was made to have steady travel.

The chassis is a crucial component of the go-kart because it must bend to offer the equivalent of suspension for optimal front-end stability and grip.

Normal chassis construction uses square tubes, usually made of mild steel in a variety of grades. We utilize an angle iron with dimensions of 35*35*5 mm for this kart chassis. The chassis supports the running system, power train, batteries, etc.

The loads on the frame are as follows:

1. The vehicle's and the passenger's weight cause the side members to flex vertically.
2. Vertical loads occur when the car encounters a bump or hollow, causing longitudinal torsion as one tire is elevated (or lowered) while the other wheels remain at normal road level.
3. Loads are caused by the road camber, side wind, and cornering force during turning, causing lateral bending of side components.
4. When a wheel collides with a road obstacle, the load on that wheel may remain impeded while the other wheel moves forward, causing distortion.
5. Torque from the engine and brake torque cause the side members to flex in the vertical plane.
6. During a collision, sudden impact loads may cause a general collapse.

Considerations

The original frame was created with the operator's safety concerns in mind. Maintaining adequate space between the driver's body rest and other solid portions of the car was the first

crucial safety criterion that was given priority throughout the design. When the fundamental requirements were satisfied, other safety designs were put into place. The chassis was designed to give the occupants more room to comfortably operate the vehicle.

Chassis material selection

The chassis frame is the basic framework of the automobile. It supports all the parts of the automobile attached to it. All the parts related to automobiles are attached to it. Its functions are to carry all the stationary loads attached to it and the loads of passengers and cargo carried in it and to withstand torsional vibration caused by the movement of the vehicle.

The material AISI 1020 was chosen for the frame design because of its good welding ability, strength, and manufacturability. A high-strength material is essential in a roll cage because it must absorb the maximum amount of energy possible to prevent the roll cage material from breaking after a high-impact collision. The chassis is made of AISI 1020, which has structural qualities that provide a low weight-to-strength ratio.

The chemical composition of the material is as follows,

Carbon (C) = 0.22

Manganese (Mn) =1.6%

Silicon (Si) = 0.55%

Sulfur (S) = 0.025%

Phosphorus (P) =0.025%

3.2.2 Steering System

The fundamentals remain the same, and it is impossible to emphasize the significance of the steering system. The performance of the vehicle is greatly influenced by the stability and response time of the steering system.

The main goal of our steering system is to provide directional control with a small turning radius. The steering wheel, column, arm, tie rod, and knuckle make up the steering system. Cars typically have an inner wheel angle of 41 degrees and an outer wheel angle of 28 to 29 degrees. The steering system is an essential component of any car's dynamic style since it enables smooth

direction changes and maximizes the tires' ability to generate lateral forces. An already developed complete assembly was ordered to minimize the cost. The above considerations were taken into account when acquiring one.

3.2.3 Axle

Design Objectives

Go-karts use a variety of rear axle designs. The most common karts are single-wheel drive models, but two-wheel drive models are also well liked. The simplest has a live axle, whereas the more complex has a differential. A live axle is one that revolves and has the wheels attached directly to it. When an axle is immobile but the wheels are free to rotate, this is referred to as a dead axle.

Live axle for traction

A live axle on a go-kart refers to an engine that drives both rear wheels simultaneously and equally. This is accomplished by using a single sprocket attached to the live axle. Due to the fact that both wheels are always locked into the drive, off-road go-karts usually employ a live axle. If both wheels are turning at once, you will have twice as much traction. This is perfect for surfaces like sand, loose mud, and others where one wheel would frequently spin out. This is not meant to suggest that live axles are perfect. A live axle makes turning difficult, which is negative for the on-road set. This results from the identical rate of rotation of the two back wheels. The outside wheel must be able to spin faster than the inside wheel when making a turn. If a live axle forces them to turn at the same speed, the outside wheel must slip on the driving surface in order to turn as quickly as possible. On mud and sand, this is simple to execute; the outside wheel can simply slip. On hard dirt and roads, however, the wheels have far more traction, making it difficult for that wheel to slip. In our design, we opted for the live axle as it provides more traction and is simpler to design and manufacture.

3.2.4 Power Train

In electric vehicles, the motor sends power to the wheels through a single-speed gearbox. The electricity required to run an electric vehicle is stored in a battery or set of batteries that power

the motor. The range increases with the battery's Ah rating. A chain drive will be mounted for transmission between the motor and the drive shaft. The main advantages are its small size, high efficiency, and low maintenance requirements.

Transferring power from the motor to the wheels is the main function of the drive system. The speed, acceleration, and torque of the vehicle are all controlled by the power train. The VEVOR ELECTRIC BRUSHLESS was chosen for our vehicle based on its low cost and availability following an extensive analysis of performance, cost, and availability.

Sprocket and chain were chosen for power transmission after careful consideration of a number of transmission techniques. The driving shaft receives power from the motor through a sprocket and chain drive. By balancing torque and speed, gearbox design primarily serves to optimize vehicle dynamics during acceleration, steering, and cornering.

3.2.5 Motor

Brushless DC motors work on the same principle as a conventional DC motor. Due to its low noise and lightweight, it is being used in vehicles. It requires low maintenance as well.

Motor Specifications

Type of motor: VEVOR ELECTRIC BRUSHLESS

Power of the motor P: 2 KW, 34 A

The maximum speed of the motor N: 4500 rpm

Maximum voltage usage (V): 48 V

Maximum current usage (I): 7 Ah

Battery limit: 48v with at least 28 Ah (12v/7*4)

Charger voltage and frequency: 220 V, 50 Hz

Maximum torque (T): 30 Nm

Controller voltage and current: 48 V and 34 A

3.2.6 Chain and Gear Mechanism

We transmit power via a gear-chain mechanism. It is appropriate for high-speed vehicles because utilizing a differential mechanism increases the weight of the kart while also raising the cost of

the mechanism. In the gear chain system, we use a 54-tooth gear on the shaft or rear sprocket and an 8-tooth gear on the motor or diver sprocket.

3.2.7 Battery

Lead acid batteries will be utilized since they are both advantageous to the environment and simple to dispose of, and because the aim of our project is to construct an eco-friendly kart. For the kart, we will use four 12V/7.2Ah lead acid batteries with a 48 V cutoff voltage. It charges in two to three hours.

3.2.8 Speed Controller

It is used to run the engine at a lower power level and to provide variable speed values. The inclusion of a speed controller can prevent battery power from being wasted and adequately utilized, allowing for the creation of a battery-powered kart. It operates at 48+/-.5 volts, with a maximum current limit of 34 A.

3.2.9 Braking system

Any land vehicle needs a strong braking system since it is the single most important safety feature. The braking mechanism of a karting car must be efficient and provide sufficient braking force to the wheels. The primary requirement is that the vehicle's braking system be able to stop all four wheels. Our brake design's main priorities are simplicity, performance, and dependability. The disc brake component is received by the drive shaft. When the brakes are applied, the wheels are stopped simultaneously after the transmission shaft is retarded (or partially stopped).

Considerations

A single lever-operated braking system is required for the vehicle. Only the back wheels may break. It is not permitted to utilize "brake-by-wire" systems. It is advised to use DOT-3 or DOT-5 brake fluid. The link between the pedal and the pump(s), which is controlled by the brake, needs to be doubled (if a cable is used, it must be at least 1.8 mm in diameter and blocked with a flat cable clip).

Brake discs must be made of cast iron, steel, or stainless steel. Each individual is free to use any tires they like. The rims must be fitted with pneumatic tires (with or without tubes). There are four wheels in all. When the vehicle is moving, only the tires may make contact with the ground. A brake by wire system is discouraged as the hydraulic brake system has the following advantages:

- Provide more braking power.
- They are long lasting.
- They are more efficient, flexible, and cost-effective than either mechanical or pneumatic brake systems.

3.3 Fabrication

The processes involved in the fabrication process include:

- Acquisition of parts.
- Fabrication of the chassis
  - Shielded Metal Arc welding of the tubes of the frame
  - Bending of the metal tubes of the frame
- Assembly and mounting of the batteries, motor, and controller on the chassis
- Assembly of the brake pad, gear and wheel hub on the rear axle
- Assembly of the rear axle on the chassis
- Assembly of the steering wheel on the chassis
- Fastening of the wheels
- Testing of the Go Kart

3.3.1 Acquisition of parts

Parts that are difficult to manufacture will be ordered and readily made. Before ordering the said parts, many considerations were made in order to obtain the best parts possible that fit our original design.

The considerations made were:

- The cost
- The availability
- The dimensions and performance
- The ergonomics and fit of the designed parts

The parts to be ordered and acquired are:

- The steering system. This includes the wheel, the steering column, and the Steering mechanisms.
- The braking system.
- The seat
- The tires.
- The rear axle. This includes the chain and sprocket and the wheel hubs.
- The drive system. This includes the batteries, the motor, and the controller.

3.3.2 Fabrication of the chassis

Shielded metal arc welding was selected as the best welding method according to various factors that were considered. The main advantages of this method are:

- Shielded metal arc welding is a versatile welding process, i.e., this method can be used for welding various metals.
- The equipment used for shielded metal arc welding is cheap and simple.

- Shielded metal arc welding is suitable for outdoor applications.
- It is simple, inexpensive, and portable

- The work piece is better protected.
- It is usable with most alloys and metals.
- It requires minimal energy and is safer.
- Produces strong welds when done properly.

The E-6011 tungsten-welding rod was selected because of its high tensile strength, i.e., 60000 psi and that it can be used in all positions. It can also be applied in both DC and AC current.

Angle irons were the preferred shape for the chassis frame as they do not bend easily but give the necessary flex. For the rest of the frame, cylindrical pipes were selected with consideration for ergonomics and aesthetics.

Bending

A tubing bender is a basic tool that provides accurate and consistent bends on a range of tubes, including copper, steel, and aluminum-based tubes. While there are various electrically and hydraulically powered automated tube benders available, these devices can be cumbersome and are not suited for on-site applications that may not have access to necessary power connections. Manual tube and pipe benders can be utilized with considerable ease and with little training in such instances. Most manual tubing benders are versatile enough to bend finished tubes and pipes up to 180 degrees

4. Expected Results

At the end of this project, it is expected that

1. The chassis will be designed.

2. The analysis of the chassis will be done.

3. The chassis will be manufactured.

4. The go-kart will be assembled.

5. The car will be tested.

5. Budget

Number	Expenditure	Quantity	Price $
1	Wheels and Tire	4	40
2	BLDC Motor + Speed controller + throttle + Key lock + ignition key	1	150
3	Battery	4	80
4	Rear axle assembly + suspensions + brakes + Steering system	1	200
5	Seat	1	10
6	Estimated shipping cost		200
7	Miscellaneous cost		100
8	Total		780

Appendixes

7.1 Working drawings

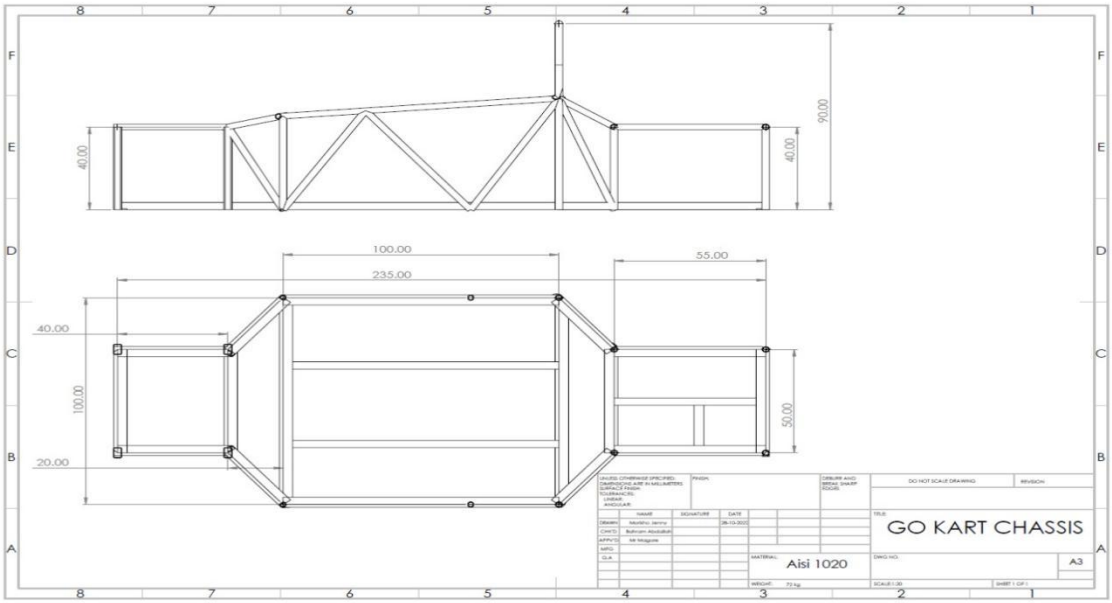

Figure 1 2D drawings of the chassis

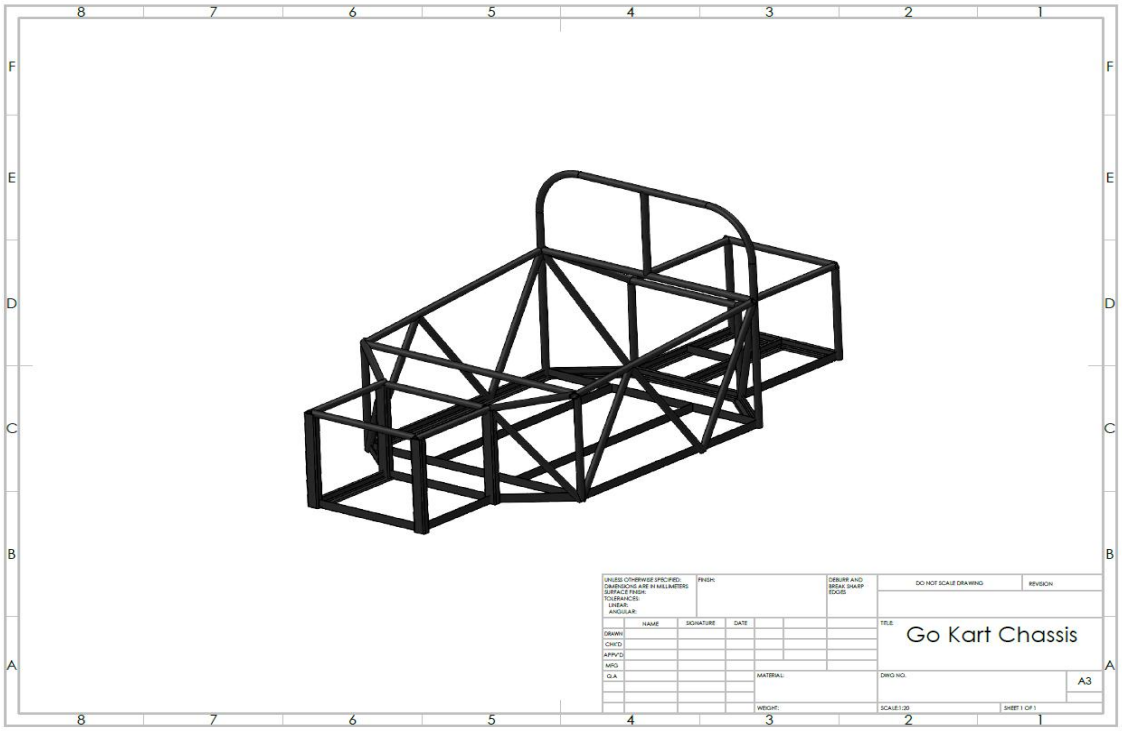

Figure 2 Isometric view of the chassis

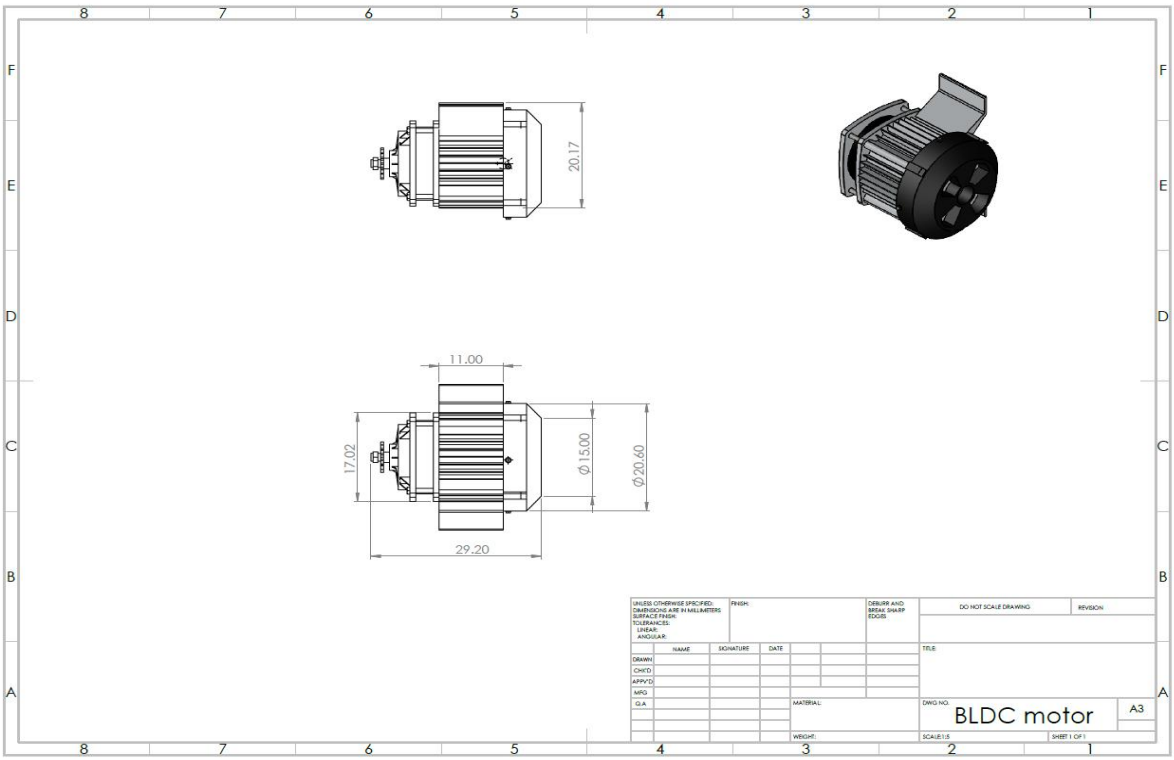

Figure 3 Motor drawing

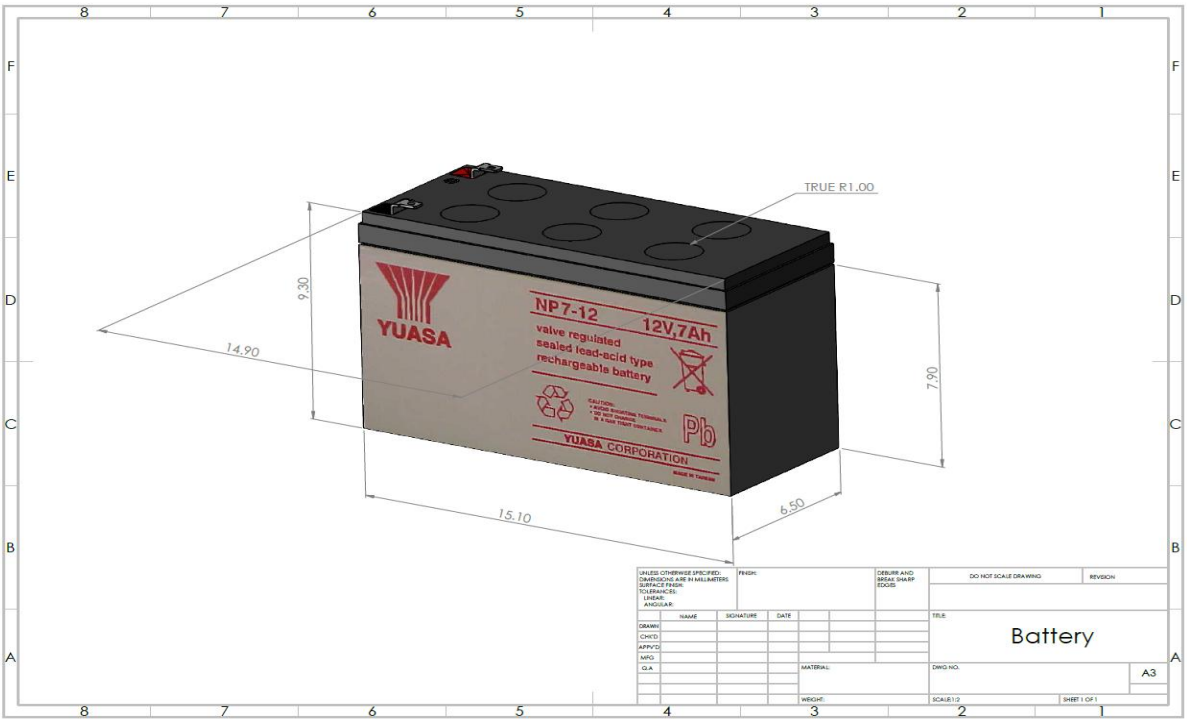

Figure 4 Battery drawing

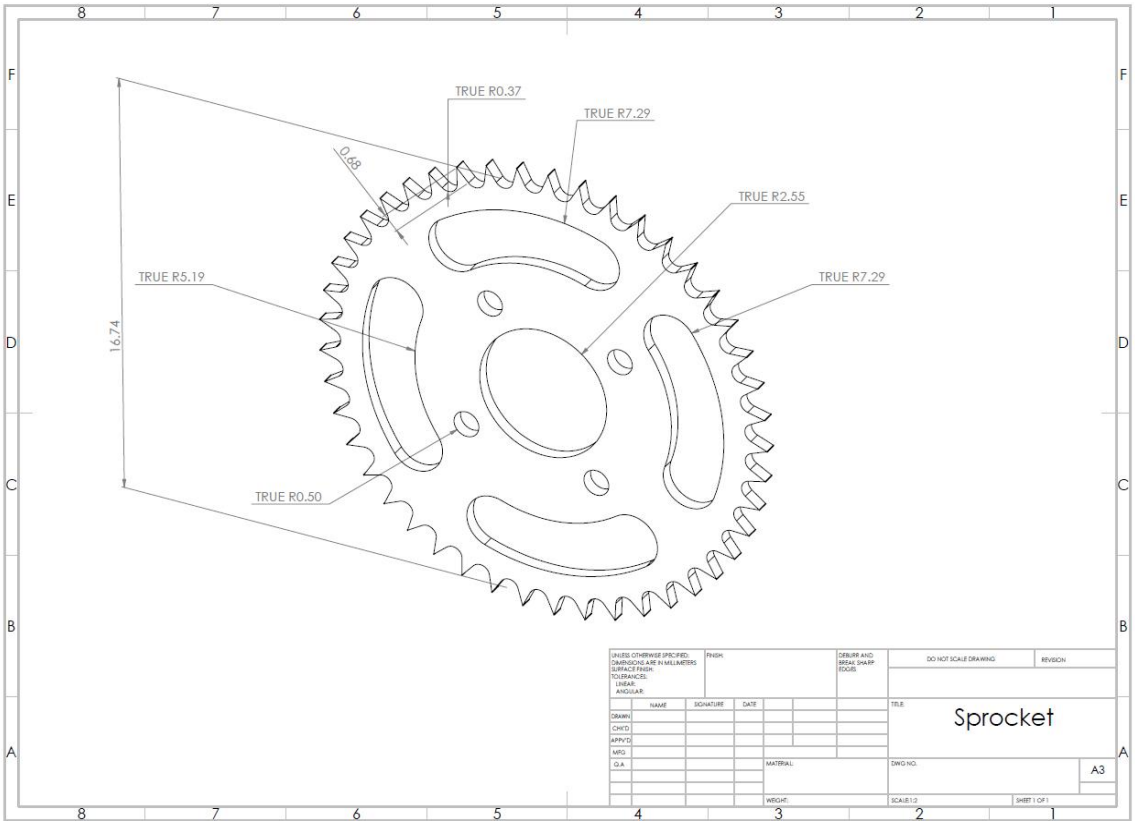

Figure 5 Sprocket drawing

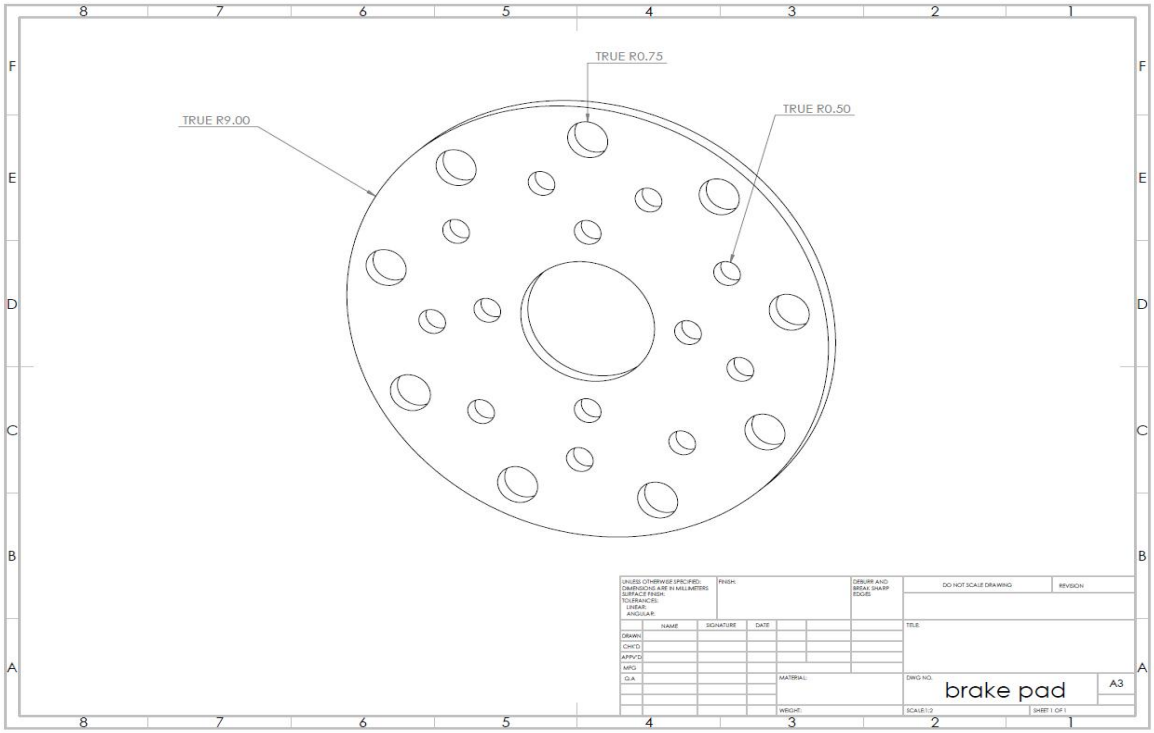

Figure 6 Brake pad drawing

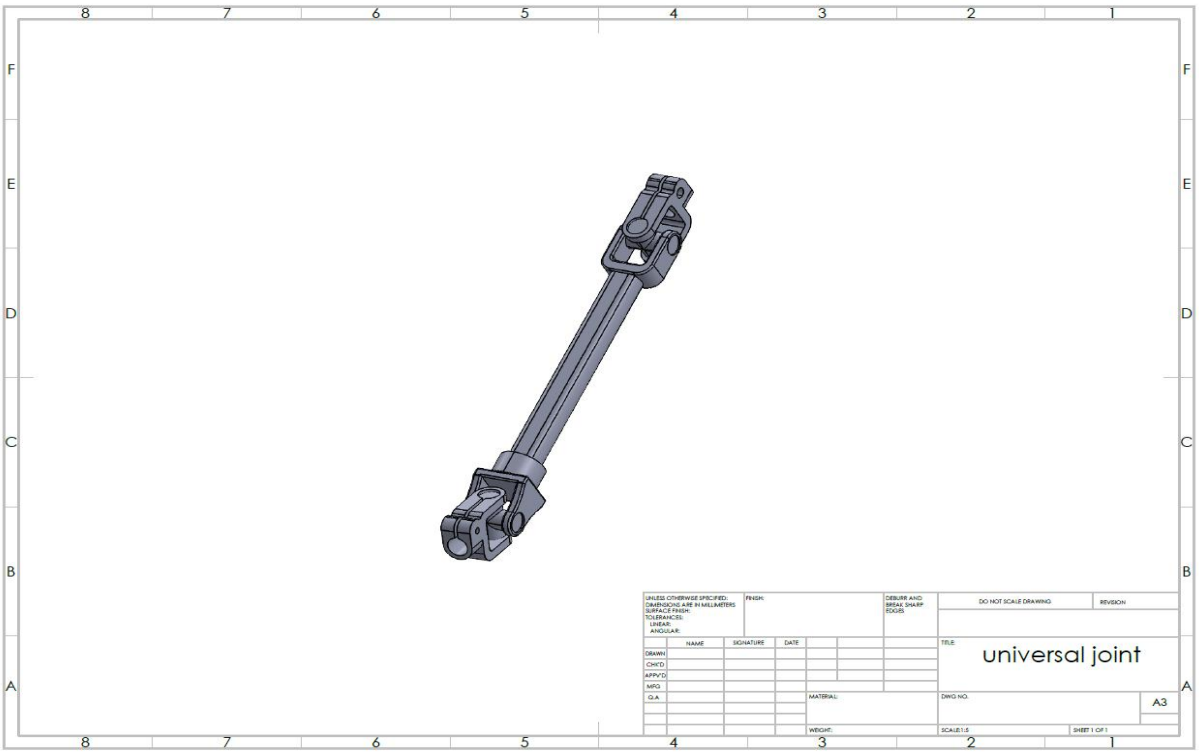

Figure 7 Universal joint drawing

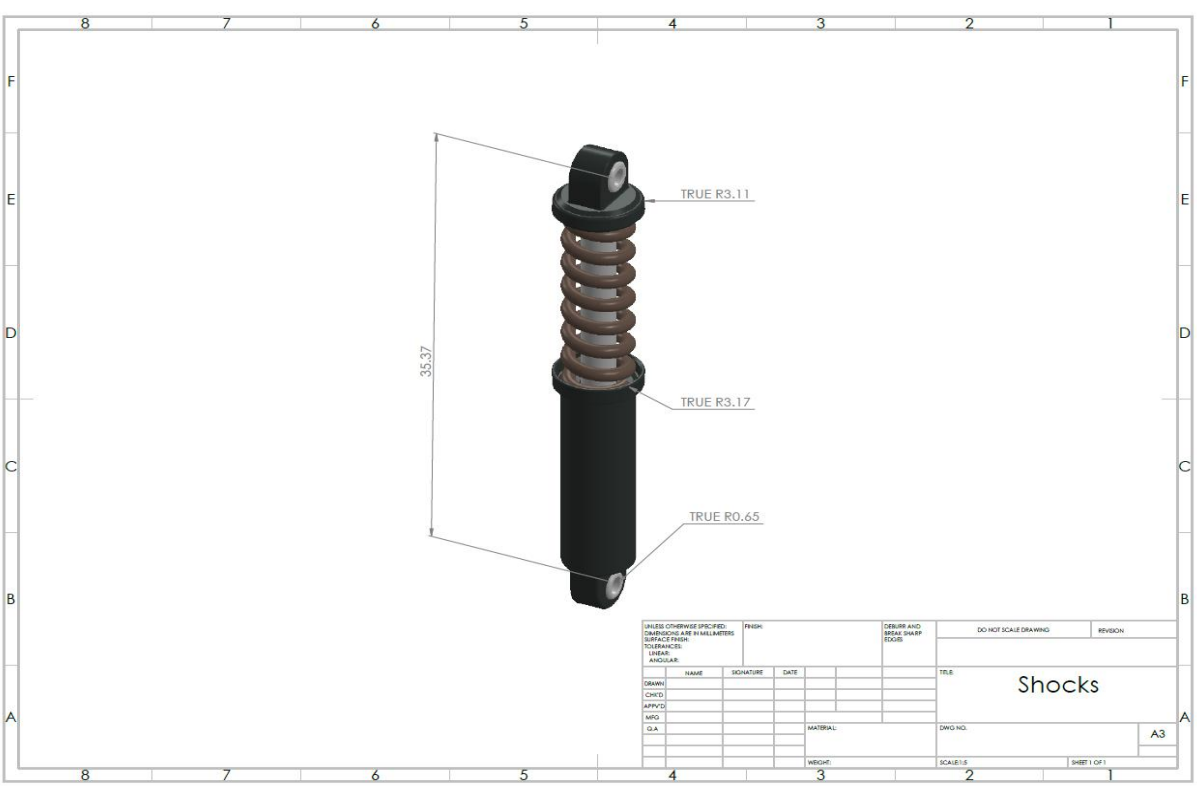

Figure 8 Shocks drawing

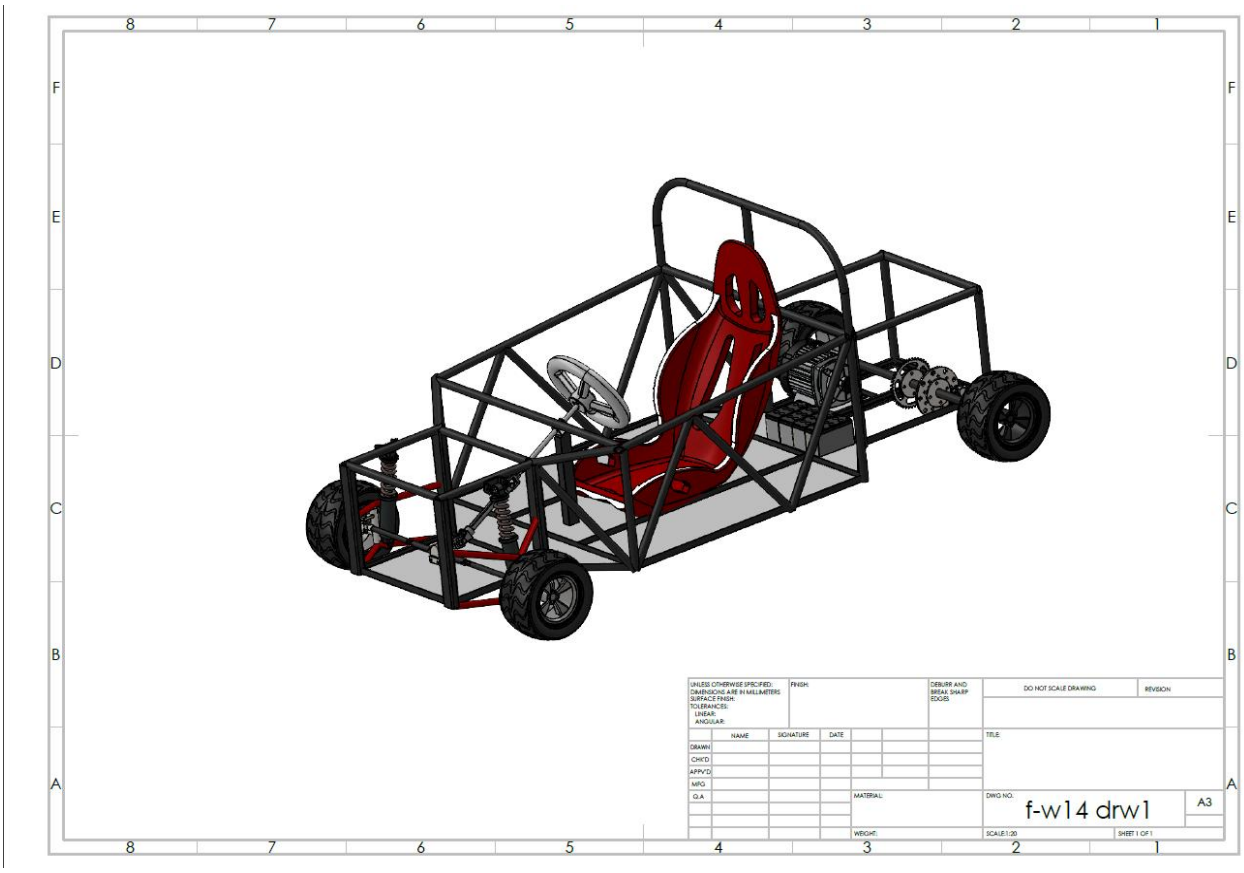

Figure 9 Final assembly of the car

Figure 10 rendering our design done in Keyshot(a)

Figure 11 rendering our design done in Keyshot(b)

Figure 12 rendering our design done in Keyshot(c)

7.2 Analysis Results

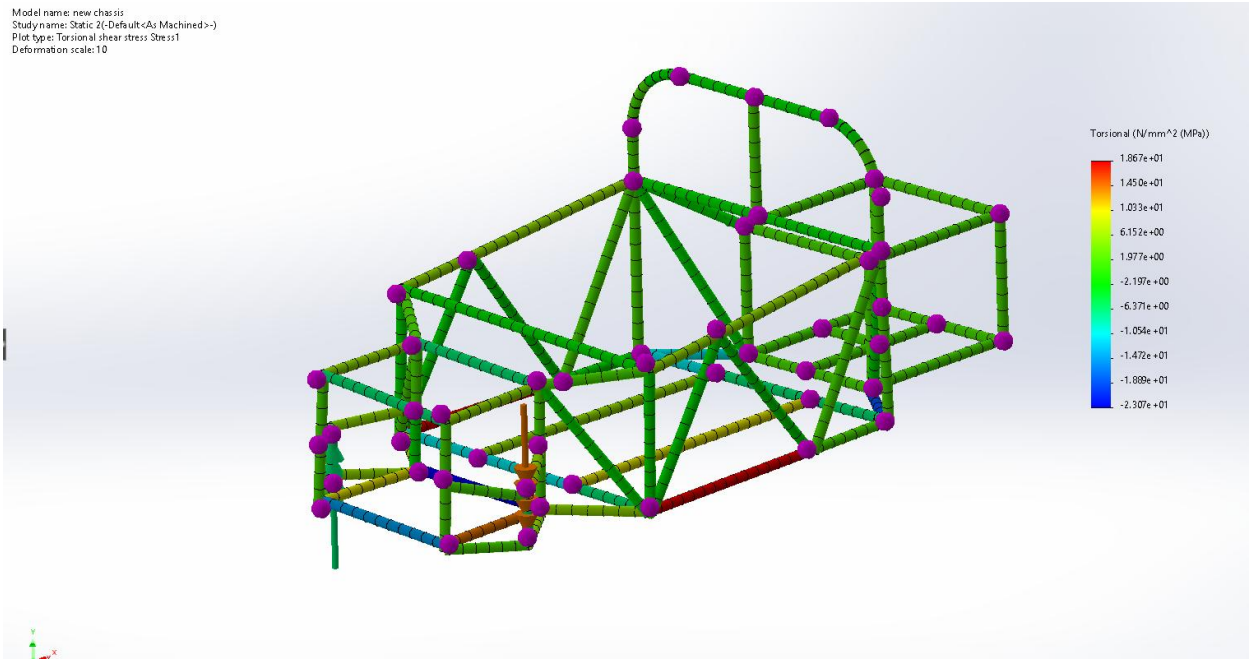

Figure 13 Torsional Shear stress analysis

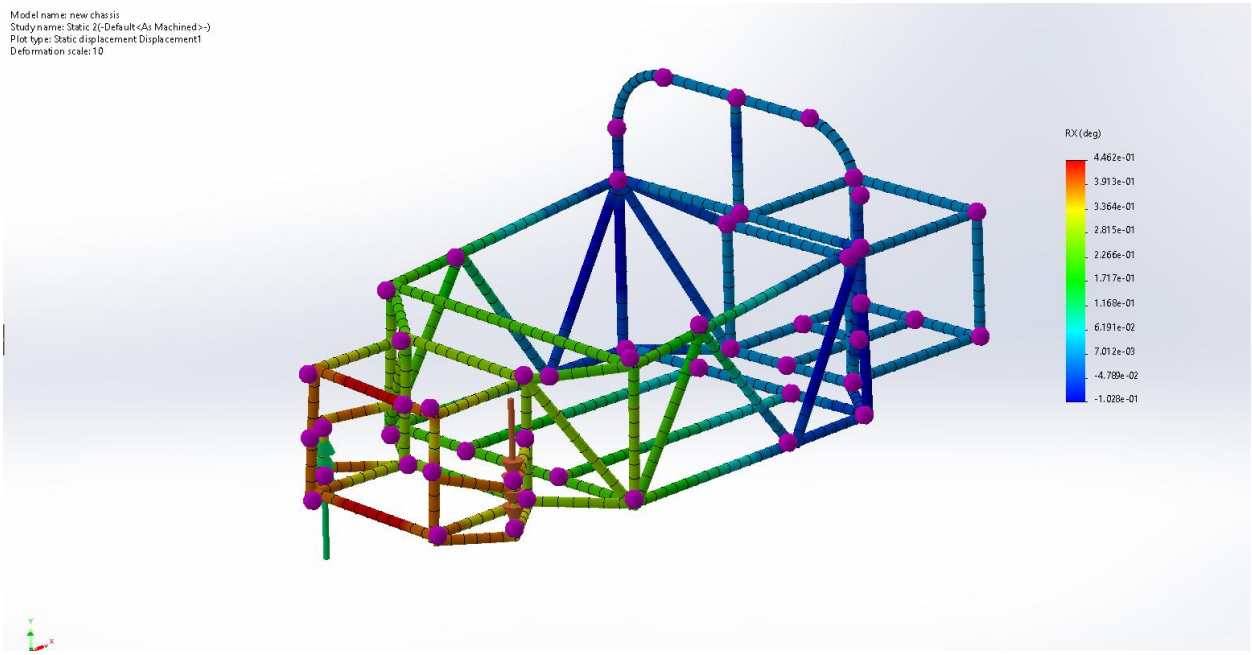

Figure 14 Torsional analysis, Total displacement in degrees

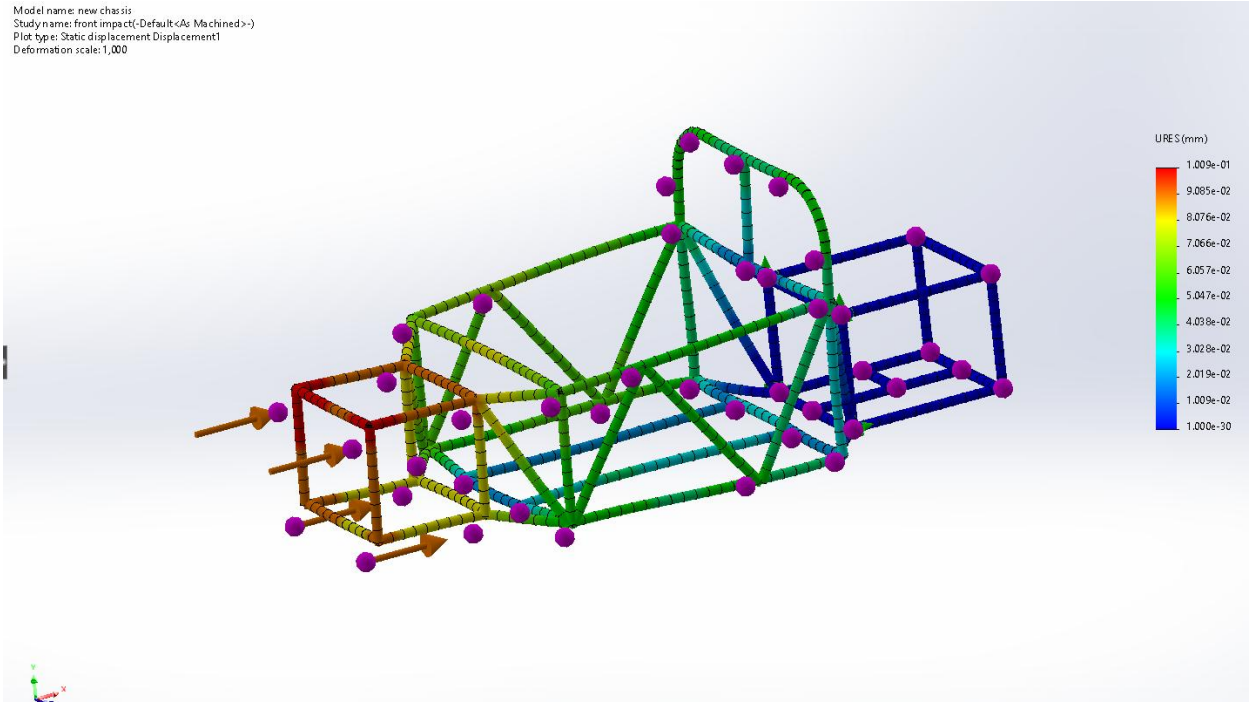

Figure 15 frontal impact test Total displacement in mm

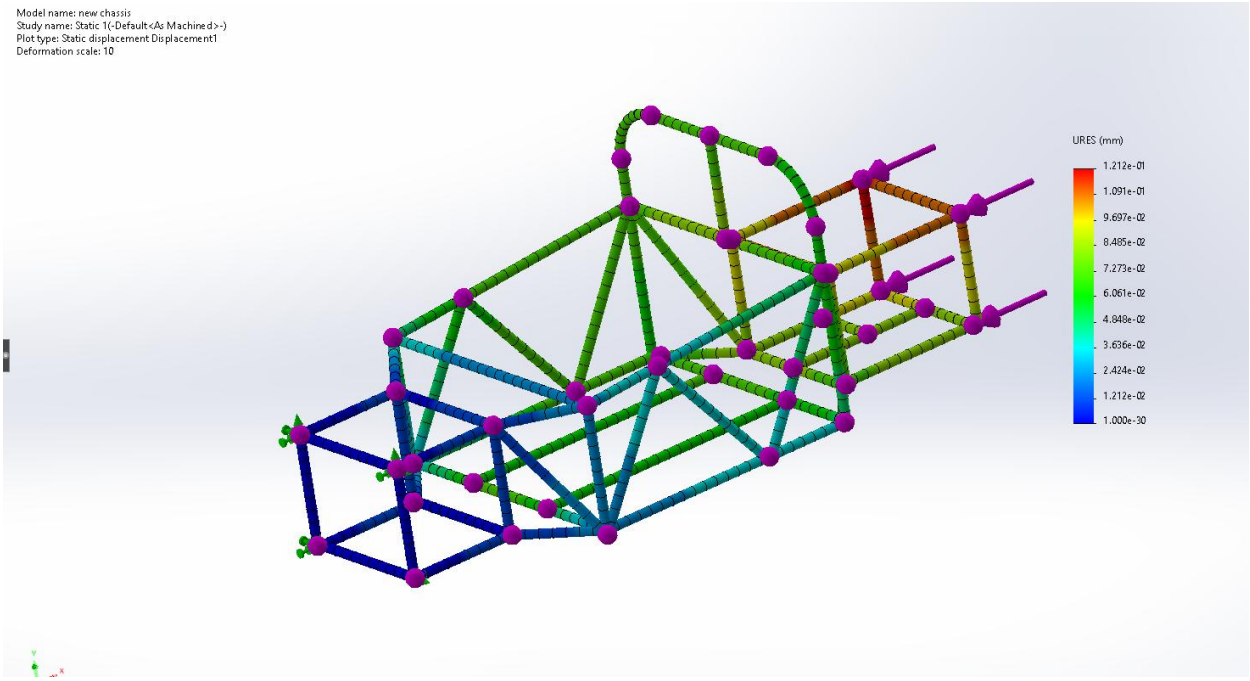

Figure 16 Rear impact test, Total displacement in mm

7.3 Calculations

1. Top Speed (Considering maximum horsepower)

$V = 25 \times \sqrt[3]{P}$

$= 25 \times \sqrt[3]{2.6}$

$= 34.4$ Mph

$= 55.2$ Kph $= 15.3$ m/s

2. Maximum allowable weight

$P = \text{Weight} \times (\text{speed}/234)^3$

$W = 2.6 \div (34.4/234)^3$

$W = 825.5$ pounds

$= 375$kg

3. Motor gear ratio

Gear ratio $= (\text{RPM} \times \pi \times \text{tire radius}) \div 60 \times \text{speed}$ [18-25]

$= (4300 \times 3.14 \times 0.27) \div 60 \times 15.3$

$= 3.9 \sim 4$

4. Wheel rpm

$\text{RPM} = (\text{speed} \times 60) \div 2\pi r$

$= (15.3 \times 60) \div 2 \times 3.14 \times 0.27$

$= 541$ rad/s

5. Number of teeth of axle sprocket

$Gr = 4$, hence $T_2 = T_1 \times 4$, but $T_1 = 8$

$T_2 = 32$

6. Power

- Rolling resistance: $F_r = C_r \times m \times g$ [18-25]

  $= 0.01 \times 190 \times 9.81$

  $= 18.4$ N

- Air resistance: $F_d = C_d \times 0.5 \times V^2 \times \text{area}$ [18-25]

  $= 0.8 \times 0.5 \times 1.2 \times 15.3^2 \times 1$

  $= 112.4$ N

- ✧ Power required for rolling resistance $= F_r \times V$

  $= 285.2\ W$

- ✧ Power required for air resistance $= F_d \times V$

  $= 1719.72\ W$

- ✧ Total power $= 285.2 + 1719.72$

  $= 2004.92\ W$

Therefore, the selected motor should provide us 2000w to reach a top speed of 15.3 m/s for a weight of 190 kg.

7. Battery Range

Motor specification: 48v, 2000w, 27A

Battery specification: 12v, 7ah

Considering 20% losses, the motor current becomes: $27 \times 1.2 = 32.4A$

Since the battery is lead acid we'll multiply the ah by a factor of 2 $7.2 \times 2 = 14.4ah$

Hence, $14.4 \div 32.4 = 0.445h$

$= 26.5$ minutes

7.4 List of equipment required

- Socket set and set of ring spanners
- Set of open ended spanners
- A small selection of screw drivers
- A selection of pliers
- A selection of clamps
- A selection of hammers
- Steel ruler and set square
- Tin snips
- Hacksaw
- Files, flat and round files
- Electric drill
- Welding set
- Vice bench

- Angle grinder

Glossary

CIK-FIA: the International Karting Commission–Federation International Automobile
ICE: Internal Combustion Engine
IC: Internal Combustion
Db: Decibel
AISI: American Iron and Steel Institute
E-6011: Mild steel welding
BLDC: Brushless Direct Current
DC: Direct Current
AC: Alternative Current
KW: Kilo Watts
P: Power
A: Amperes
V: Volts
RPM: Revolutions per minute
I: Current
Ah: Amperes hours
Hz: Hertz
Nm: Newton Meters
M: Mass
G.R: Gear Ratio
G: Acceleration due to gravity
DOT: Department of transportation
Cr: Coefficient of rolling
Cd: Coefficient of drag

Index

References

1. Arjunan, A., & Baroutaji, A. (2021). Sound pressure level of a Formula 3 car and the influence of detachable muffler-tip. Results in Engineering, 11, 100261. https://doi.org/10.1016/j.rineng.2021.100261

2. History of Formula E. (n.d.). Retrieved November 8, 2022, from FIA Formula E website: https://www.fiaformulae.com/en/discover/history#:~:text=Formula%20E%20kicked%20off%20the

3. Matulka, R. (2014, September 15). The History of the Electric Car. Retrieved from Energy.gov website: https://www.energy.gov/articles/history-electric-car

4. Will Formula 1's drop-in fuel actually reduce carbon emissions? (n.d.). Retrieved November 8, 2022, from www.soci.org website: https://www.soci.org/blog/2022/6/will-formula-1s-dropin-fuel-actually-reduce-carbon-emissions

5. Prof. Ambeprasad Kushwaha & Prof. Avinash Chavan Tapeshwar A. Das, Shubham S. Kenjale, Jay A. Patel, Pradeep R. Prajapati (2018) Design and fabrication of cost effective electric go kart International Research Journal of Engineering and Technology (IRJET) Volume: 05 Issue: 04

6. Ashirbad sahu, Manas Ranjan Panda, Mahendra Khara, Soumya Ranjan Senapati, Samika Parida, Bijaya Rao (2020) Design and Analysis of Electric Go-Kart Chassis Journal of Xi'an University of Architecture & Technology Volume XII, Issue III, pp 4739

7. N.A.Z. Abdullah, M.S.M. Sani, N.A. Husain, M.M. Rahman and I. Zaman (2017) Dynamics properties of a Go-kart chassis structure and its prediction improvement using model updating approach International Journal of Automotive and Mechanical Engineering Volume 14, Issue 1 pp 3887-3897 https://doi.org/10.15282/ijame.14.1.2017.6.0316

8. R. Santosh Kumar, R. Rohith, S. Srinivas (2019) Design of a compact go kart vehicle International Research Journal of Engineering and Technology (IRJET) Volume 06, Issue 09 hjdghf

9. Ehsani, M.; Gao, Y. (2005) Modern Electric, Hybrid Electric, and Fuel Cell Vehicles—Fundamentals, Theory and Design; CRC Press: Boca Raton, FL, USA, pp. 142–154. https://doi.org/10.1201/9781420054002

10. Cardoso, C.; Ferreira, J.; Alves, V.; Araújo, R.E. (2006) The design and implementation of an electric go-kart for educational in motor control. In Proceedings of the International Symposium on Power Electronics, Electrical Drives, Automation and Motion, SPEEDAM https://doi.org/10.1109/SPEEDAM.2006.1650003

11. Vitols, K.; Reinberg, N.; Sokolovs, A.; Galkins, (2010) I. Drive Selection for Electric Kart. In Proceedings of the 14th International Power Electronics and Motion Control Conference (EPE/PEMC), Ohrid, Macedonia, .https://doi.org/10.1109/EPEPEMC.2010.5606882

12. Raghunandan, D.; Pandiyan, A.; Majeed, S. Design and Analysis of Go-Kart Chassis, IJESRT: Tamil Nadu, India. ISSN: 2277-9655; https://doi.org/10.5281/zenodo.164912

13. Aniket, S.S.; Sameer, S.R.; Shubham, K.A.; Nehatrao, S.A. (2017) Design and Analysis of Go-kart Chassi; Issue 1; IJARIIE: India, Volume 3. ISSN: 2395-4396

14. Kumar, N.S.; Rana, R.; Hassan, M.N.; Goswami, K. (2019) Design and Impact Analysis of Go-kart Chassis; No. 09; IJAER International Journal of Applied Engineering Research: India; Volume 14. ISSN: 0973-4562

15. Koustubh, H.; Yuvraj, S.; Ankush, K. (2016) A Review Paper on Design and Analysis of a Go-Kart Chassis; Issue 2; IJAETMAS International Journal Of Engineering Technology, Management and Applied Sciences: India; Volume 4. ISSN 2349-4476

16. Renuke, (2102) P.A. Dynamic Analysis of a Car Chassis; Issue 6; IJERA International Journal of Engineering Research and Applications; Volume 2, pp. 955–959. ISSN 2248-9622

17. Patil, N.R.; Kulkarni, R.R.; Mane, B.R.; Malve, S.H. (2104) Static analysis of Go-Kart Chassis frame by Analytical and SolidWorks Simulation; Issue No. 5; IJSET International Journal of Scientific Engineering and Technology: Rajasthan, India; Volume 3, pp. 661–663. ISSN 2277-1581

18. Ujwal Jaya Amin,(2021) Design of Transmission system for an Electric Go Kart, International Advanced Research Journal in Science, Engineering and Technology, Vol. 8, Issue 5, May 202, DOI: 10.17148/IARJSET.2021.85114

19. Srivastava, Jay Prakash, et al. "Case Study on Different Go Kart Engine Transmission Systems." IOP Conference Series: Materials Science and Engineering. Vol. 981. No. 4. IOP Publishing, 2020.

20. Kudari, Gurunath C., et al. "Design of Transmission System for Go-Kart Vehicle." Int. J. Eng. Tech 4 (2018): 926-31.

21. Gupta, S. P., et al. "Transmission in Go-Kart." Invertis Journal of Science & Technology 12.2 (2019): 47-49.

22. Bopaiah, Karan. "Design and Analysis of Go-Kart using Finite Element Method."

23. Krishnamoorthi, Sangeetha, et al. "Design and analysis of electric Go-Kart." Materials Today: Proceedings (2020).

24. Heisler, Heinz. Advanced vehicle technology. Elsevier, 2002.

25. Nilawar, Abhinay, et al. "Design of Go-Kart." Maharashtra, India, IJFEAT, ISSN (2016):

2321-8134.